PT NW1/4 OF SW1/4 SEC 11
IN OR 2487/1200

**BRANCH RICHARD W III & TAMARA LYNN**
153897 CR 108
YULEE, FL 32097

**2024**

**11-3N-26-0000-0001-0040**

## NASSAU COUNTY PROPERTY



### BUILDING CHARACTERISTICS

| ELEMENT | CD | CONSTRUCTION |
|---|---|---|
| Exterior Wall | 12 | CEDAR 100 |
| Roof Structur | 08 | IRREGULAR 100 |
| Roof Cover | 12 | MODULAR MT 100 |
| Interior Wall | 06 | CUST PANEL 60 |
| Interior Wall | 05 | DRYWALL 40 |
| Interior Floo | 11 | CLAY TILE 80 |
| Interior Floo | 14 | CARPET 20 |
| Air Condition | 03 | CENTRAL 100 |
| Heating Type | 04 | AIR DUCTED 100 |
| Bedrooms | | 3 100 |
| Bathrooms | | 2 100 |
| Frame | 02 | WOOD FRAME 100 |
| Stories | 1.5 | 1.5 100 |
| Units | | 0 100 |
| Occupancy | 00 | NONE 100 |
| Quality | 06 | Quality Level 06 |
| DOR CODE | 5000 | IMPROVED AG |
| MAP NUM | | MKT AREA 05 |
| NEIGHBORHOOD/LOC | 5001.00 | |

| AREA TYPE | TOTAL GROSS AREA | PCT OF BASE | TOT ADJ AREA | SUBAREA MARKET VALUE |
|---|---|---|---|---|
| BAS | 1,335 | 100 | 1,335 | 176,412 |
| DCK | 90 | 10 | 9 | 1,189 |
| DCK | 1,040 | 10 | 104 | 13,743 |
| FGR | 528 | 55 | 290 | 38,322 |
| FUS | 384 | 100 | 384 | 50,743 |
| UOP | 152 | 20 | 30 | 3,964 |
| TOTALS | 3,529 | | 2,152 | 284,373 |

### MARKET ADJUSTMENTS

| TYPE | MDL | EFF. AREA | TOT ADJ PTS | EFF. BASE RATE | REPL. COST NEW | AYB | EYB | ECON | FNCT | | NORM | % COND |
|---|---|---|---|---|---|---|---|---|---|---|---|---|
| 0100 | 01 | 2,152 | 148.7640 | 141.33 | 304,142 | 1983 | 2010 | 0 | 0 | 0 | 6.50 | 93.50 |

1 SINGLE FAM – 100% - 2022 Heated Area: 1719 HX Base Yr 2022

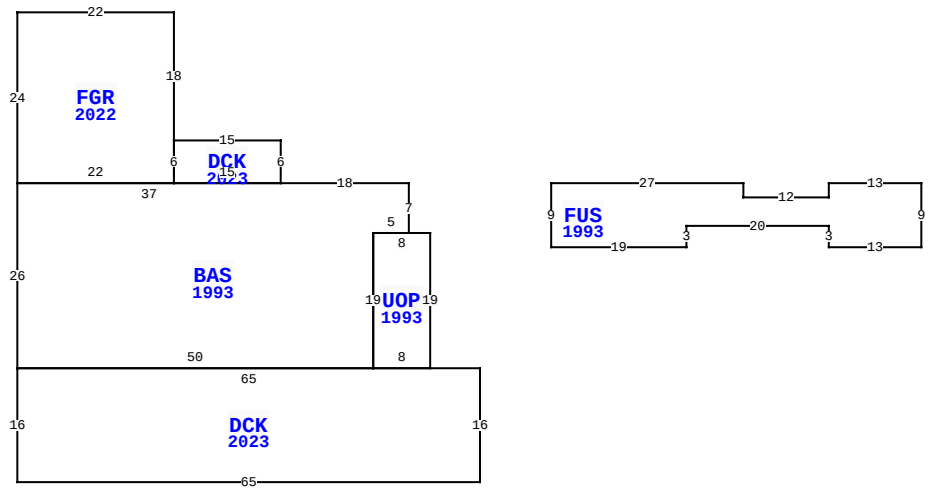


153897 CR 108, YULEE

| | | | |
|---|---|---|---|
| BLD DATE | | LGL DATE | |
| XF DATE | | LAND DATE | 05/24/2023 MLU |
| INC DATE | | AG DATE | |

### NASSAU COUNTY PROPERTY — VALUATION SUMMARY

| | | |
|---|---|---|
| VALUATION BY | | STANDARD |
| Tax Group: 4 | Tax Dist: | |
| BUILDING MARKET VALUE | | 284,373 |
| TOTAL MARKET OB/XF VALUE | | 31,962 |
| TOTAL LAND VALUE - MARKET | | 339,600 |
| TOTAL MARKET VALUE | | 449,330 |
| SOH/AGL Deduction | | 94,974 |
| ASSESSED VALUE | | 354,356 |
| TOTAL EXEMPTION VALUE | HX HB VX | 55,000 |
| BASE TAXABLE VALUE | | 299,356 |
| TOTAL JUST VALUE | | 655,935 |
| NCON VALUE | | 0 |
| INCOME VALUE | | |
| PREVIOUS YEAR MKT VALUE | | 643,849 |

| PERMIT NUM | DESCRIPTION | AMT | ISSUED |
|---|---|---|---|
| 21011933 | REPAIR/RRF | 64,976 | 09/08/2021 |

### SALES DATA

| OFF RECORD Number | DATE | TYPE INST | Q / U | V / I | RSN CD | SALE PRICE |
|---|---|---|---|---|---|---|
| 2487/1200 | 5/25/2021 | WD | U | I | 11 | 100 |
| GRANTOR: ROWE CYNTHIA M | | | | | | |
| GRANTEE: BRANCH RICHARD W II | | | | | | |
| 2465/0908 | 5/25/2021 | WD | Q | I | 02 | 550,000 |
| GRANTOR: ROWE CYNTHI M A/K/A C | | | | | | |
| GRANTEE: BRANCH RICHARD WILL | | | | | | |

### BUILDING NOTES

### BUILDING DIMENSIONS

BAS=[YR=1993;ORIG=0,0] W18 W37 S26 E50 N19 E5 N7 $
FGR=[YR=2022;ORIG=-33,-6] N18 W22 S24 E22 N6 $
FUS=[YR=1993;ORIG=20,0] E27 S2 E12 N2 E13 S9 W13 N3 W20 S3 W19 N9 $
UOP=[YR=1993;ORIG=3,26] N19 W8 S19 E8 $
PTR=[ORIG=0,0] E20 W20 $
DCK=[YR=2023;ORIG=-33,-6] E15 S6 W15 N6 $
DCK=[YR=2023;ORIG=-55,26] E65 S16 W65 N16 $
.

### EXTRA FEATURES

| LN | OB/XF CODE | DESCRIPTION | BLD | CAP | L | W | UNITS | UT | Adj R | ADJ UNIT PRICE | ORIG COND | YEAR ON | YEAR ACTUAL | Q | % COND | OB/XF MKT VALUE | NOTES |
|---|---|---|---|---|---|---|---|---|---|---|---|---|---|---|---|---|---|
| 1 | 0680 | POLE SHED | 0 | 100 | 22 | 21 | 462.00 | SF | 10.00 | 10.00 | 100 | 1990 | 1990 | 3 | 20 | 924 | |
| 2 | 0681 | POLE SHED | 0 | 100 | 12 | 21 | 252.00 | SF | 15.00 | 15.00 | 100 | 1990 | 1990 | 3 | 20 | 756 | |
| 3 | 0810 | CONCRETE A | 0 | 100 | 18 | 37 | 666.00 | SF | 6.50 | 6.50 | 100 | 1983 | 1983 | 3 | 41 | 1,775 | |
| 4 | 0681 | POLE SHED | 0 | 100 | 12 | 18 | 324.00 | SF | 15.00 | 15.00 | 100 | 1985 | 1985 | 3 | 20 | 972 | |
| 5 | 0504 | FP-ELECTRI | 0 | 100 | 0 | 0 | 1.00 | UT | 2,000.00 | 2,000.00 | 100 | 2021 | 2021 | 3 | 99 | 1,980 | |
| 6 | 0300 | BOAT DCK W | 1 | 100 | 0 | 0 | 597.00 | SF | 40.00 | 40.00 | 100 | 2023 | 2022 | | 98 | 23,402 | |
| 7 | 1242 | WD DECK A | 1 | 100 | 0 | 0 | 222.00 | SF | 10.00 | 10.00 | 100 | 2023 | 2022 | | 97 | 2,153 | |

### LAND DESCRIPTION

TOTAL OB/XF 31,962

| LN | USE CODE | CLS | LAND USE DESCRIPTION | CAP | RD | LOC ZONE | FRONT | DEPTH | TOT LND UTS | UNIT TYPE | DT | DPTH FACT | % COND | TOT ADJ | UNIT PRICE | ADJ UNIT PRICE | LAND VALUE | OTHER ADJUSTMENTS AND NOTES | YEAR | DENSITY | DECL | FRZ | YR | CONSRV |
|---|---|---|---|---|---|---|---|---|---|---|---|---|---|---|---|---|---|---|---|---|---|---|---|---|
| 1 | 005000 | C | RURAL HOME | 100 | | OR | 0.00 | 0.00 | 2.88 | AC | | 1.00 | 1.00 | 1.00 | 45,000.00 | 45,000.00 | 129,600 | | | | | | | |
| 2 | 005600 | A | TIMBER 3 SI | 0 | | | 0.00 | 0.00 | 7.00 | AC | | 1.00 | 1.00 | 1.00 | 415.00 | 415.00 | 2,905 | | | | | | | |
| 3 | 005970 | A | AGRI-POND | 0 | | | 0.00 | 0.00 | 7.00 | AC | | 1.00 | 1.00 | 1.00 | 70.00 | 70.00 | 490 | | | | | | | |
| 4 | 009910 | M | MKT.VAL.AG | 0 | | | 0.00 | 0.00 | 14.00 | AC | | 1.00 | 1.00 | 1.00 | 15,000.00 | 15,000.00 | 210,000 | | | | | | | |

REVIEW DATE 05/03/2022 BY TW Total Acres: 16.88 Total Land Value: 132,995 Market: 210,000 Agricultural: 3,395 Common: 129,600 PRINTED 08/06/2024 BY SYS