LOT 189
TIMBER CREEK PLANTATION #3
PB 7/302

VESSEL RANDY E & JENNIFER L
77041 COBBLESTONE DR
YULEE, FL 32097

2024

11-2N-26-2052-0189-0000

NASSAU COUNTY PROPERTY

BUILDING CHARACTERISTICS

ELEMENT	CD	CONSTRUCTION
Exterior Wall	05	AVERAGE 80
Exterior Wall	16	WD FR STUC 20
Roof Structur	03	GABLE/HIP 100
Roof Cover	03	COMP SHNGL 100
Interior Wall	05	DRYWALL 100
Interior Floo	13	LVT/LAMNT 60
Interior Floo	14	CARPET 40
Air Condition	03	CENTRAL 100
Heating Type	04	AIR DUCTED 100
Bedrooms		5 100
Bathrooms		3 100
Frame	02	WOOD FRAME 100
Stories	2.	2. 100
Units		0 100
Occupancy	00	NONE 100
Quality	03	Quality Level 03
DOR CODE	0100	SINGLE FAMILY
MAP NUM		MKT AREA 05
NEIGHBORHOOD/LOC	5005.00	

AREA TYPE	TOTAL GROSS AREA	PCT OF BASE	TOT ADJ AREA	SUBAREA MARKET VALUE
BAS	1,076	100	1,076	102,794
FGR	441	55	243	23,215
FOP	61	30	18	1,720
FUS	1,280	100	1,280	122,283
PTO	100	5	5	478
TOTALS	2,958		2,622	250,489

MARKET ADJUSTMENTS

TYPE	MDL	EFF. AREA	TOT ADJ PTS	EFF. BASE RATE	REPL. COST NEW	AYB	EYB	ECON	FNCT		NORM	% COND
0100	01	2,622	105.4080	100.14	262,567	2013	2013	0	0	0	4.60	95.40

1 SINGLE FAM – 100% - 2023 Heated Area: 2356 HX Base Yr 2023

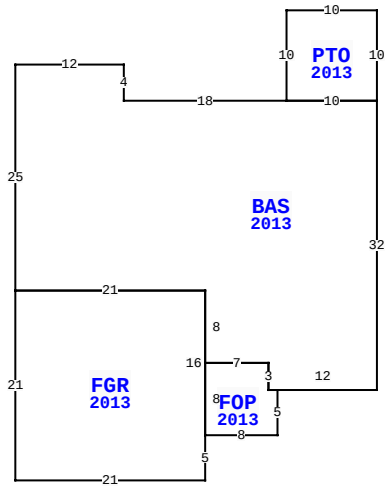

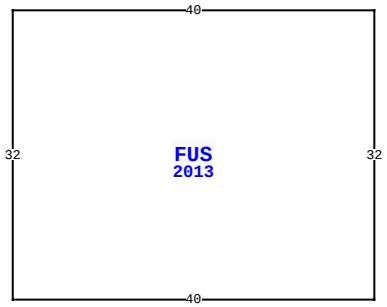

77041 COBBLESTONE DR, YULEE

BLD DATE		LGL DATE	
XF DATE		LAND DATE	
INC DATE		AG DATE	

EXTRA FEATURES

LN	OB/XF CODE	DESCRIPTION	BLD	CAP	L	W	UNITS	UT	Adj R	ADJ UNIT PRICE	ORIG COND	YEAR ON	YEAR ACTUAL	Q	% COND	OB/XF MKT VALUE	NOTES
1	0810	CONCRETE A	0	100	0	0	544.00	SF	6.50	6.50	100	2013	2013	3	94	3,324	
2	0861	POOL GUNIT	0	100	30	14	420.00	SF	85.00	85.00	100	2016	2016	3	81	28,917	
3	0855	CONC PAVER	0	100	0	0	845.00	SF	10.00	10.00	100	2016	2016	3	96	8,112	
4	1076	TRELLIS A	0	100	25	8	200.00	SF	7.50	7.50	100	2018	2018	3	87	1,305	

VALUATION SUMMARY

VALUATION BY		STANDARD
Tax Group: 4	Tax Dist:	
BUILDING MARKET VALUE		250,489
TOTAL MARKET OB/XF VALUE		41,658
TOTAL LAND VALUE - MARKET		55,000
TOTAL MARKET VALUE		347,147
SOH/AGL Deduction		0
ASSESSED VALUE		347,147
TOTAL EXEMPTION VALUE	VX HX HB	55,000
BASE TAXABLE VALUE		292,147
TOTAL JUST VALUE		347,147
NCON VALUE		0
INCOME VALUE		
PREVIOUS YEAR MKT VALUE		337,098

PERMIT NUM	DESCRIPTION	AMT	ISSUED
B1632809	SWIM POOL	40,000	08/01/2016
B1327515	CO ISSUED	0	11/12/2013
B1327515	NEW CONSTR	268,320	07/01/2013

SALES DATA

OFF RECORD Number	DATE	TYPE INST	Q / U	V / I	RSN CD	SALE PRICE
2557/0056	4/14/2022	WD	Q	I	01	447,000
GRANTOR: CRESSEY SHAWN & MOLLI						
GRANTEE: VESSEL RANDY EUGENE						
1889/1594	11/11/2013	SW	Q	I	02	183,600
GRANTOR: KB HOME JACKSONVILLE						
GRANTEE: CRESSEY SHAWN & MOL						

BUILDING NOTES

BUILDING DIMENSIONS

PTO=[YR=2013] W10 S10 BAS=[YR=2013] W18 N4 W12 S25 FGR=[YR=2013] S21 E21 N5 FOP=[YR=2013] E8 N5 W1 N3 W7 S8$ N16 W21$ E21 S8 E7 S3 E12 N32 W10$ E10 N10$ PTR=E20 FUS=[YR=2013] E40 S32 W40 N32$ W20$.

LAND DESCRIPTION

TOTAL OB/XF 41,658

LN	USE CODE	CLS	LAND USE DESCRIPTION	CAP	RD	LOC ZONE	FRONT	DEPTH	TOT LND UTS	UNIT TYPE	DT	DPTH FACT	% COND	TOT ADJ	UNIT PRICE	ADJ UNIT PRICE	LAND VALUE	OTHER ADJUSTMENTS AND NOTES	YEAR	DENSITY	DECL	FRZ	YR	CONSRV
1	000100	C	SFR	100	0003	PUD	0.00	0.00	1.00	LT		1.00	1.00	1.00	55,000.00	55,000.00	55,000							

REVIEW DATE 05/12/2022 BY KBA Total Acres: 0.00 Total Land Value: 55,000 Market: 0 Agricultural: 0 Common: 55,000 PRINTED 08/06/2024 BY SYS