LOT 177
IN OR 1925/1117
TIMBER CREEK PLANTATION #3

SMITH JESSIE M & JEFFREY A SR
78101 UNDERWOOD CT
YULEE, FL 32097

2024

11-2N-26-2052-0177-0000

NASSAU COUNTY PROPERTY

BUILDING CHARACTERISTICS

ELEMENT	CD	CONSTRUCTION
Exterior Wall	05	AVERAGE 80
Exterior Wall	16	WD FR STUC 20
Roof Structur	03	GABLE/HIP 100
Roof Cover	03	COMP SHNGL 100
Interior Wall	05	DRYWALL 100
Interior Floo	14	CARPET 70
Interior Floo	08	SHT VINYL 30
Air Condition	03	CENTRAL 100
Heating Type	04	AIR DUCTED 100
Bedrooms		4 100
Bathrooms		2.5 100
Frame	02	WOOD FRAME 100
Stories	2.	2. 100
Units		0 100
Occupancy	00	NONE 100
Quality	03	Quality Level 03
DOR CODE	0100	SINGLE FAMILY
MAP NUM		MKT AREA 05
NEIGHBORHOOD/LOC	5005.00	

AREA TYPE	TOTAL GROSS AREA	PCT OF BASE	TOT ADJ AREA	SUBAREA MARKET VALUE
BAS	1,300	100	1,300	116,454
FGR	630	55	346	30,995
FOP	30	30	9	807
FOP	100	30	30	2,687
FUS	1,301	100	1,301	116,543
PTO	54	5	3	269
PTO	100	5	5	448
TOTALS	3,515		2,994	268,204

MARKET ADJUSTMENTS

TYPE	MDL	EFF. AREA	TOT ADJ PTS	EFF. BASE RATE	REPL. COST NEW	AYB	EYB	ECON	FNCT		NORM	% COND
0100	01	2,994	98.3240	93.41	279,670	2014	2014	0	0	0	4.10	95.90

1 SINGLE FAM – 0% - 0 Heated Area: 2601 HX Base Yr

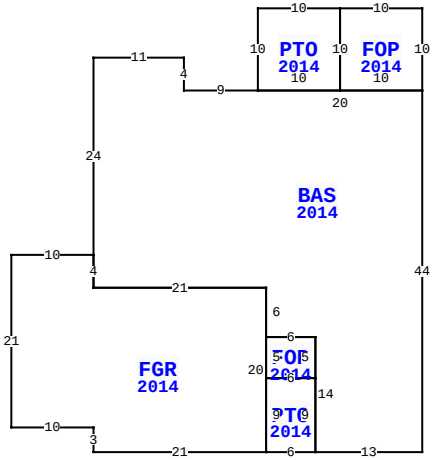

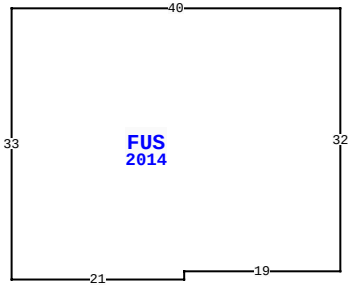

78101 UNDERWOOD CT, YULEE

BLD DATE		LGL DATE	
XF DATE		LAND DATE	
INC DATE		AG DATE	

VALUATION SUMMARY

VALUATION BY	STANDARD
Tax Group: 4	Tax Dist:
BUILDING MARKET VALUE	268,204
TOTAL MARKET OB/XF VALUE	39,623
TOTAL LAND VALUE - MARKET	55,000
TOTAL MARKET VALUE	362,827
SOH/AGL Deduction	8,564
ASSESSED VALUE	354,263
TOTAL EXEMPTION VALUE	0
BASE TAXABLE VALUE	354,263
TOTAL JUST VALUE	362,827
NCON VALUE	0
INCOME VALUE	
PREVIOUS YEAR MKT VALUE	351,758

PERMIT NUM	DESCRIPTION	AMT	ISSUED
18002205	SWIM POOL	49,058	03/01/2018
B1428544	CO ISSUED	0	06/30/2014
B1428544	NEW CONSTR	300,711	05/01/2014

SALES DATA

OFF RECORD Number	DATE	TYPE INST	Q / U	V / I	RSN CD	SALE PRICE
1925/1117	6/27/2014	SW	Q	I	01	226,000
GRANTOR: KB HOME JACKSONVILLE						
GRANTEE: SMITH JESSIE M & JE						
1731/1512	3/31/2011	WD	U	I	30	1,920,000
GRANTOR: TIMBER CREEK II LLC						
GRANTEE: KB HOME JACKSONVILL						

BUILDING NOTES

BUILDING DIMENSIONS

FOP=[YR=2014] W10 PTO=[YR=2014] W10 S10 BAS=[YR=2014] W9 N4 W11 S24 FGR=[YR=2014] W10 S21 E10 S3 E21 PTO=[YR=2014] E6 N9 FOP=[YR=2014] N5 W6 S5 E6$ W6 S9$ N20 W21 N4$ S4 E21 S6 E6 S14 E13 N44 W20$ E10 N10$ S10 E10 N10$ PTR=E20 FUS=[YR=2014] E40 S32 W19 S1 W21 N33$ W20$.

EXTRA FEATURES

LN	OB/XF CODE	DESCRIPTION	BLD	CAP	L	W	UNITS	UT	Adj R	ADJ UNIT PRICE	ORIG COND	YEAR ON	YEAR ACTUAL	Q	% COND	OB/XF MKT VALUE	NOTES
1	0811	CONCRETE B	0	0	0	0	786.00	SF	5.20	5.20	100	2014	2014	3	95	3,883	
2	0861	POOL GUNIT	0	0	0	0	360.00	SF	85.00	85.00	100	2018	2018	3	87	26,622	
3	0855	CONC PAVER	0	0	0	0	940.00	SF	10.00	10.00	100	2018	2018	3	97	9,118	

LAND DESCRIPTION

TOTAL OB/XF 39,623

LN	USE CODE	CLS	LAND USE DESCRIPTION	CAP	RD	LOC ZONE	FRONT	DEPTH	TOT LND UTS	UNIT TYPE	DT	DPTH FACT	% COND	TOT ADJ	UNIT PRICE	ADJ UNIT PRICE	LAND VALUE	OTHER ADJUSTMENTS AND NOTES	YEAR	DENSITY	DECL	FRZ	YR	CONSRV
1	000100	C	SFR	0	0003	PUD	0.00	0.00	1.00	LT		1.00	1.00	1.00	55,000.00	55,000.00	55,000							

REVIEW DATE 04/08/2020 BY KBP Total Acres: 0.00 Total Land Value: 55,000 Market: 0 Agricultural: 0 Common: 55,000 PRINTED 08/06/2024 BY SYS