LOT 120
IN OR 1926/884
TIMBER CREEK PLANTATION #3

DIETZ BEVERLY
77103 ANDORA DR
YULEE, FL 32097

2024

11-2N-26-2052-0120-0000

NASSAU COUNTY PROPERTY

BUILDING CHARACTERISTICS

ELEMENT	CD	CONSTRUCTION
Exterior Wall	05	AVERAGE 80
Exterior Wall	16	WD FR STUC 20
Roof Structur	08	IRREGULAR 100
Roof Cover	03	COMP SHNGL 100
Interior Wall	05	DRYWALL 100
Interior Floo	11	CLAY TILE 50
Interior Floo	14	CARPET 50
Air Condition	03	CENTRAL 100
Heating Type	04	AIR DUCTED 100
Bedrooms		5 100
Bathrooms		3.5 100
Frame	02	WOOD FRAME 100
Stories	2.	2. 100
Units		0 100
Occupancy	00	NONE 100
Quality	03	Quality Level 03
DOR CODE	0100	SINGLE FAMILY
MAP NUM		MKT AREA 05
NEIGHBORHOOD/LOC	5005.00	

AREA TYPE	TOTAL GROSS AREA	PCT OF BASE	TOT ADJ AREA	SUBAREA MARKET VALUE
BAS	2,074	100	2,074	195,734
FGR	630	55	346	32,654
FOP	24	30	7	661
FOP	187	30	56	5,285
FUS	1,068	100	1,068	100,793
TOTALS	3,983		3,551	335,126

MARKET ADJUSTMENTS

TYPE	MDL	EFF. AREA	TOT ADJ PTS	EFF. BASE RATE	REPL. COST NEW	AYB	EYB	ECON	FNCT		NORM	% COND
0100	01	3,551	103.5900	98.41	349,454	2014	2014	0	0	0	4.10	95.90

1 SINGLE FAM – 100% - 2015 Heated Area: 3142 HX Base Yr 2015

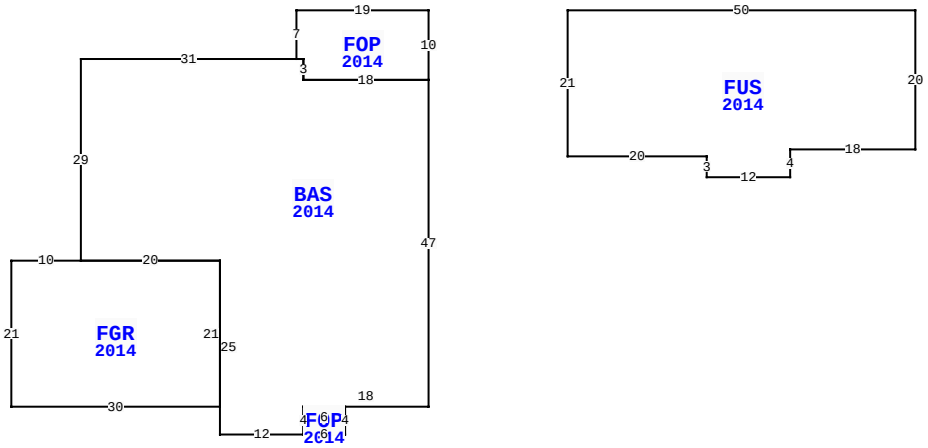

77103 ANDORA DR, YULEE

BLD DATE		LGL DATE	
XF DATE		LAND DATE	
INC DATE		AG DATE	

VALUATION SUMMARY

VALUATION BY		STANDARD
Tax Group: 4	Tax Dist:	
BUILDING MARKET VALUE		335,126
TOTAL MARKET OB/XF VALUE		4,442
TOTAL LAND VALUE - MARKET		55,000
TOTAL MARKET VALUE		394,568
SOH/AGL Deduction		116,906
ASSESSED VALUE		277,662
TOTAL EXEMPTION VALUE	HX HB	50,000
BASE TAXABLE VALUE		227,662
TOTAL JUST VALUE		394,568
NCON VALUE		0
INCOME VALUE		
PREVIOUS YEAR MKT VALUE		379,474

PERMIT NUM	DESCRIPTION	AMT	ISSUED
B1428543	NEW CONSTR	363,255	05/01/2014

SALES DATA

OFF RECORD Number	DATE	TYPE INST	Q U	V I	RSN CD	SALE PRICE
1926/0884	6/30/2014	SW	Q	I	01	247,800
GRANTOR: KB HOME JACKSONVILLE						
GRANTEE: DIETZ STUART C JR &						
1841/1909	2/14/2013	WD	Q	V	05	638,000
GRANTOR: BWC LAND LLC						
GRANTEE: KB HOME JACKSONVILL						

BUILDING NOTES

BUILDING DIMENSIONS

FOP=[YR=2014] W19 S7 BAS=[YR=2014] W31 S29 FGR=[YR=2014] W10 S21 E30 N21 W20$ E20 S25 E12 FOP=[YR=2014] E6 N4 W6 S4$ N4 E18 N47 W18 N3 W1$ E1 S3 E18 N10$ PTR=E20 FUS=[YR=2014] E50 S20 W18 S4 W12 N3 W20 N21$ W20$.

EXTRA FEATURES

LN	OB/XF CODE	DESCRIPTION	BLD	CAP	L	W	UNITS	UT	Adj R	ADJ UNIT PRICE	ORIG COND	YEAR ON	YEAR ACTUAL	Q	% COND	OB/XF MKT VALUE	NOTES
1	0812	CONCRETE C	0	100	0	0	1,169.00	SF	4.00	4.00	100	2014	2014	3	95	4,442	

LAND DESCRIPTION

TOTAL OB/XF 4,442

LN	USE CODE	CLS	LAND USE DESCRIPTION	CAP	RD	LOC ZONE	FRONT	DEPTH	TOT LND UTS	UNIT TYPE	DT	DPTH FACT	% COND	TOT ADJ	UNIT PRICE	ADJ UNIT PRICE	LAND VALUE	OTHER ADJUSTMENTS AND NOTES	YEAR	DENSITY	DECL	FRZ	YR	CONSRV
1	000134	C	SFR POND	100		PUD	0.00	0.00	1.00	LT		1.00	1.00	1.00	55,000.00	55,000.00	55,000							

REVIEW DATE 05/12/2019 BY KBA Total Acres: 0.00 Total Land Value: 55,000 Market: 0 Agricultural: 0 Common: 55,000 PRINTED 08/06/2024 BY SYS