LOT 15
IN OR 1890/1796
TIMBER CREEK PLANTATION #3

KARAMALISHO SAMANDARI/PEREZ-SANDI BRITTNEY
76653 TIMBERCREEK BLVD
YULEE, FL 32097

2024

11-2N-26-2052-0015-0000

BUILDING CHARACTERISTICS

ELEMENT	CD	CONSTRUCTION
Exterior Wall	05	AVERAGE 80
Exterior Wall	16	WD FR STUC 20
Roof Structur	03	GABLE/HIP 100
Roof Cover	03	COMP SHNGL 100
Interior Wall	05	DRYWALL 100
Interior Floo	14	CARPET 70
Interior Floo	08	SHT VINYL 30
Air Condition	03	CENTRAL 100
Heating Type	04	AIR DUCTED 100
Bedrooms		4 100
Bathrooms		2.5 100
Frame	02	WOOD FRAME 100
Stories	2.	2. 100
Units		0 100
Occupancy	00	NONE 100
Quality	03	Quality Level 03
DOR CODE	0100	SINGLE FAMILY
MAP NUM		MKT AREA 05
NEIGHBORHOOD/LOC	5005.00	

AREA TYPE	TOTAL GROSS AREA	PCT OF BASE	TOT ADJ AREA	SUBAREA MARKET VALUE
BAS	1,998	100	1,998	172,597
FGR	420	55	231	19,955
FOP	36	30	11	950
FUS	1,131	100	1,131	97,701
PTO	100	5	5	432
TOTALS	3,685		3,376	291,635

MARKET ADJUSTMENTS

TYPE	MDL	EFF. AREA	TOT ADJ PTS	EFF. BASE RATE	REPL. COST NEW	AYB	EYB	ECON	FNCT		NORM	% COND
0100	01	3,376	95.3120	90.55	305,697	2013	2013	0	0	0	4.60	95.40

1 SINGLE FAM – 100% - 2019 Heated Area: 3129 HX Base Yr 2019

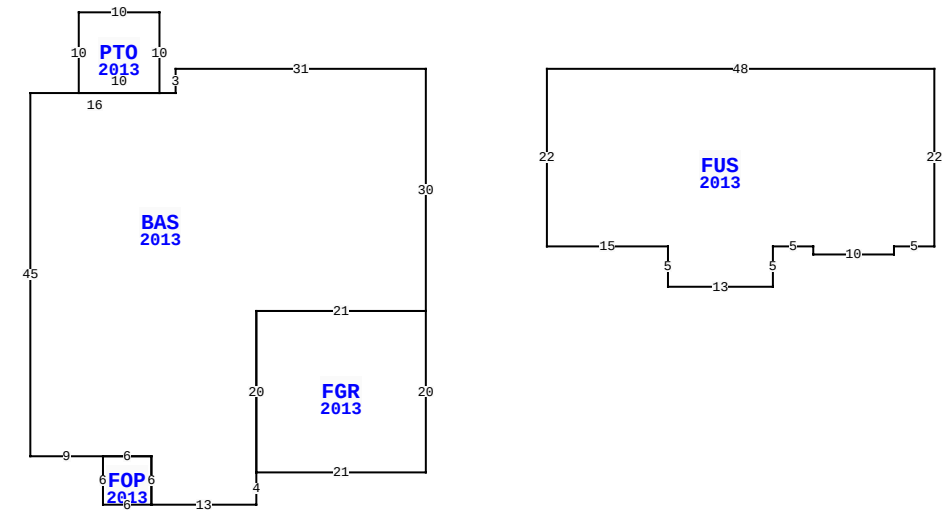

76653 TIMBERCREEK BLVD, YULEE

BLD DATE		LGL DATE	
XF DATE		LAND DATE	
INC DATE		AG DATE	

NASSAU COUNTY PROPERTY

PAGE 1 of 1 4

VALUATION SUMMARY

VALUATION BY		STANDARD
Tax Group: 4	Tax Dist:	
BUILDING MARKET VALUE		291,635
TOTAL MARKET OB/XF VALUE		4,583
TOTAL LAND VALUE - MARKET		55,000
TOTAL MARKET VALUE		351,218
SOH/AGL Deduction		87,857
ASSESSED VALUE		263,361
TOTAL EXEMPTION VALUE	HX HB	50,000
BASE TAXABLE VALUE		213,361
TOTAL JUST VALUE		351,218
NCON VALUE		0
INCOME VALUE		
PREVIOUS YEAR MKT VALUE		338,129

PERMIT NUM	DESCRIPTION	AMT	ISSUED
B1327025	CO ISSUED	0	06/24/2013

SALES DATA

OFF RECORD Number	DATE	TYPE INST	Q / U	V / I	RSN CD	SALE PRICE
1890/1796	9/17/2013	SW	Q	I	02	196,000
GRANTOR: KB HOME JACKSONVILLE						
GRANTEE: KARAMALISHO SAMANDA						
1731/1512	3/31/2011	WD	U	I	30	1,920,000
GRANTOR: TIMBER CREEK II LLC						
GRANTEE: KB HOME JACKSONVILL						

BUILDING NOTES

BUILDING DIMENSIONS

BAS=[YR=2013] W31 S3 W2 PTO=[YR=2013] N10 W10 S10 E10$ W16 S45 E9 FOP=[YR=2013] S6 E6 N6 W6$ E6 S6 E13 N4 FGR=[YR=2013] E21 N20 W21 S20$ N20 E21 N30$ PTR=E15 FUS=[YR=2013] E48 S22 W5 S1 W10 N1 W5 S5 W13 N5 W15 N22$ W15$.

EXTRA FEATURES

LN	OB/XF CODE	DESCRIPTION	BLD	CAP	L	W	UNITS	UT	Adj R	ADJ UNIT PRICE	ORIG COND	YEAR ON	YEAR ACTUAL	Q	% COND	OB/XF MKT VALUE	NOTES
1	0812	CONCRETE C	0	100	0	0	1,219.00	SF	4.00	4.00	100	2013	2013	3	94	4,583	

LAND DESCRIPTION

TOTAL OB/XF 4,583

LN	USE CODE	CLS	LAND USE DESCRIPTION	CAP	RD	LOC ZONE	FRONT	DEPTH	TOT LND UTS	UNIT TYPE	DT	DPTH FACT	% COND	TOT ADJ	UNIT PRICE	ADJ UNIT PRICE	LAND VALUE	OTHER ADJUSTMENTS AND NOTES	YEAR	DENSITY	DECL	FRZ	YR	CONSRV
1	000134	C	SFR POND	100	0003	PUD	0.00	0.00	1.00	LT		1.00	1.00	1.00	55,000.00	55,000.00	55,000							

REVIEW DATE 05/12/2019 BY KBA Total Acres: 0.00 Total Land Value: 55,000 Market: 0 Agricultural: 0 Common: 55,000 PRINTED 08/06/2024 BY SYS