LOT 10
TIMBER CREEK PLANTATION #3
PB 7/302

**BURGESS SHANNON L & KIMBERLY S**
76613 TIMBERCREEK BLVD
YULEE, FL 32097

**2024**

**11-2N-26-2052-0010-0000**

## BUILDING CHARACTERISTICS

| ELEMENT | CD | CONSTRUCTION |
|---|---|---|
| Exterior Wall | 05 | AVERAGE 70 |
| Exterior Wall | 16 | WD FR STUC 30 |
| Roof Structur | 03 | GABLE/HIP 100 |
| Roof Cover | 03 | COMP SHNGL 100 |
| Interior Wall | 05 | DRYWALL 100 |
| Interior Floo | 14 | CARPET 80 |
| Interior Floo | 08 | SHT VINYL 20 |
| Air Condition | 03 | CENTRAL 100 |
| Heating Type | 04 | AIR DUCTED 100 |
| Bedrooms | | 3 100 |
| Bathrooms | | 2 100 |
| Frame | 02 | WOOD FRAME 100 |
| Stories | 1. | 1. 100 |
| Units | | 0 100 |
| Occupancy | 00 | NONE 100 |
| Quality | 03 | Quality Level 03 |
| DOR CODE | 0100 | SINGLE FAMILY |
| MAP NUM | | MKT AREA 05 |
| NEIGHBORHOOD/LOC | 5005.00 | |

| AREA TYPE | TOTAL GROSS AREA | PCT OF BASE | TOT ADJ AREA | SUBAREA MARKET VALUE |
|---|---|---|---|---|
| BAS | 1,672 | 100 | 1,672 | 157,828 |
| FGR | 736 | 55 | 405 | 38,230 |
| FOP | 37 | 30 | 11 | 1,039 |
| FOP | 78 | 30 | 23 | 2,171 |
| PTO | 130 | 5 | 6 | 566 |
| TOTALS | 2,653 | | 2,117 | 199,834 |

## MARKET ADJUSTMENTS

| TYPE | MDL | EFF. AREA | TOT ADJ PTS | EFF. BASE RATE | REPL. COST NEW | AYB | EYB | ECON | FNCT | | NORM | % COND |
|---|---|---|---|---|---|---|---|---|---|---|---|---|
| 0100 | 01 | 2,117 | 104.7620 | 99.52 | 210,684 | 2012 | 2012 | 0 | 0 | 0 | 5.15 | 94.85 |

1 SINGLE FAM – 100% - 2022 Heated Area: 1672 HX Base Yr 2022

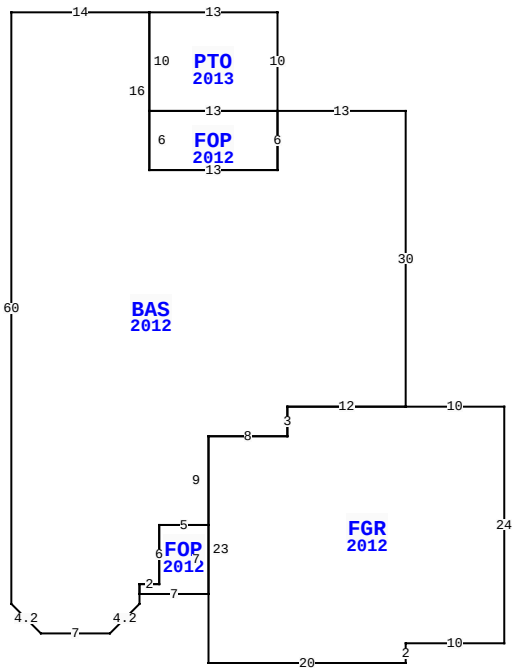


76613 TIMBERCREEK BLVD, YULEE

| | | | |
|---|---|---|---|
| BLD DATE | 09/19/2012 KK | LGL DATE | |
| XF DATE | | LAND DATE | |
| INC DATE | | AG DATE | |

## NASSAU COUNTY PROPERTY

PAGE 1 of 1 4

### VALUATION SUMMARY

| | | |
|---|---|---|
| VALUATION BY | | STANDARD |
| Tax Group: 4 | Tax Dist: | |
| BUILDING MARKET VALUE | | 199,834 |
| TOTAL MARKET OB/XF VALUE | | 5,477 |
| TOTAL LAND VALUE - MARKET | | 55,000 |
| TOTAL MARKET VALUE | | 260,311 |
| SOH/AGL Deduction | | 34,733 |
| ASSESSED VALUE | | 225,578 |
| TOTAL EXEMPTION VALUE | HX HB | 50,000 |
| BASE TAXABLE VALUE | | 175,578 |
| TOTAL JUST VALUE | | 260,311 |
| NCON VALUE | | 0 |
| INCOME VALUE | | |
| PREVIOUS YEAR MKT VALUE | | 251,390 |

| PERMIT NUM | DESCRIPTION | AMT | ISSUED |
|---|---|---|---|
| B26022 | CO ISSUED | 0 | 08/22/2012 |
| M17250 | H/AC | 0 | 06/01/2012 |
| E25051 | TEMP POLE | 0 | 05/01/2012 |
| P15901 | NEW CONSTR | 0 | 05/01/2012 |
| B26022 | NEW CONSTR | 206,071 | 05/01/2012 |

## SALES DATA

| OFF RECORD Number | DATE | TYPE INST | Q / U | V / I | RSN CD | SALE PRICE |
|---|---|---|---|---|---|---|
| 2464/1494 | 5/25/2021 | WD | Q | I | 01 | 261,100 |
| GRANTOR: GASSON TIMOTHY J & LO | | | | | | |
| GRANTEE: BURGESS SHANNON L & | | | | | | |
| 2030/0220 | 2/17/2016 | WD | Q | I | 01 | 173,000 |
| GRANTOR: MOORE LARRY D & LINDA | | | | | | |
| GRANTEE: GASSON TIMOTHY J | | | | | | |

## BUILDING NOTES

## BUILDING DIMENSIONS

FGR=[YR=2012] W10 BAS=[YR=2012] N30 W13 PTO=[YR=2013] N10 W13 S10 FOP=[YR=2012] S6 E13 N6 W13$ E13$S6 W13 N16 W14 S60 D3 R3 E7 U3 R3 N1 FOP=[YR=2012] E7 N7 W5 S6 W2 S1$ N1 E2 N6 E5 N9 E8 N3 E12$ W12 S3 W8 S23 E20 N2 E10 N24$.

## EXTRA FEATURES

| LN | OB/XF CODE | DESCRIPTION | BLD | CAP | L | W | UNITS | UT | Adj R | ADJ UNIT PRICE | ORIG COND | YEAR ON | YEAR ACTUAL | Q | % COND | OB/XF MKT VALUE | NOTES |
|---|---|---|---|---|---|---|---|---|---|---|---|---|---|---|---|---|---|
| 1 | 0812 | CONCRETE C | 0 | 100 | 0 | 0 | 1,404.00 | SF | 4.00 | 4.00 | 100 | 2012 | 2012 | 3 | 93 | 5,223 | |
| 2 | 0810 | CONCRETE A | 0 | 100 | 14 | 3 | 42.00 | SF | 6.50 | 6.50 | 100 | 2012 | 2012 | 3 | 93 | 254 | |

## LAND DESCRIPTION

TOTAL OB/XF 5,477

| LN | USE CODE | CLS | LAND USE DESCRIPTION | CAP | RD | LOC ZONE | FRONT | DEPTH | TOT LND UTS | UNIT TYPE | DT | DPTH FACT | % COND | TOT ADJ | UNIT PRICE | ADJ UNIT PRICE | LAND VALUE | OTHER ADJUSTMENTS AND NOTES | YEAR | DENSITY | DECL | FRZ | YR | CONSRV |
|---|---|---|---|---|---|---|---|---|---|---|---|---|---|---|---|---|---|---|---|---|---|---|---|---|
| 1 | 000134 | C | SFR POND | 100 | 0003 | PUD | 0.00 | 0.00 | 1.00 | LT | | 1.00 | 1.00 | 1.00 | 55,000.00 | 55,000.00 | 55,000 | | | | | | | |

REVIEW DATE 05/12/2019 BY KBA Total Acres: 0.00 Total Land Value: 55,000 Market: 0 Agricultural: 0 Common: 55,000 PRINTED 08/06/2024 BY SYS