LOT 127
TIMBER CREEK PLANTATION #2
PB 7/165

HATTON THOMAS & JAMIE
86085 MEADOWRIDGE CT
YULEE, FL 32097

2024

11-2N-26-2051-0127-0000

NASSAU COUNTY PROPERTY

BUILDING CHARACTERISTICS

ELEMENT	CD	CONSTRUCTION
Exterior Wall	16	WD FR STUC 100
Roof Structur	03	GABLE/HIP 100
Roof Cover	03	COMP SHNGL 100
Interior Wall	05	DRYWALL 100
Interior Floo	14	CARPET 70
Interior Floo	08	SHT VINYL 30
Air Condition	03	CENTRAL 100
Heating Type	04	AIR DUCTED 100
Bedrooms		5 100
Bathrooms		3.5 100
Frame	02	WOOD FRAME 100
Stories	2.	2. 100
Units		0 100
Occupancy	00	NONE 100
Quality	03	Quality Level 03
DOR CODE	0100	SINGLE FAMILY
MAP NUM		MKT AREA 05
NEIGHBORHOOD/LOC	5005.00	

AREA TYPE	TOTAL GROSS AREA	PCT OF BASE	TOT ADJ AREA	SUBAREA MARKET VALUE
BAS	1,687	100	1,687	143,316
FGR	651	55	358	30,413
FOP	108	30	32	2,719
FUS	1,792	100	1,792	152,235
PTO	9	5	0	0
PTO	210	5	10	849
TOTALS	4,457		3,879	329,532

MARKET ADJUSTMENTS

TYPE	MDL	EFF. AREA	TOT ADJ PTS	EFF. BASE RATE	REPL. COST NEW	AYB	EYB	ECON	FNCT		NORM	% COND
0100	01	3,879	97.2000	92.34	358,187	2007	2007	0	0	0	8.00	92.00

1 SINGLE FAM – 100% - 2020 Heated Area: 3479 HX Base Yr 2020

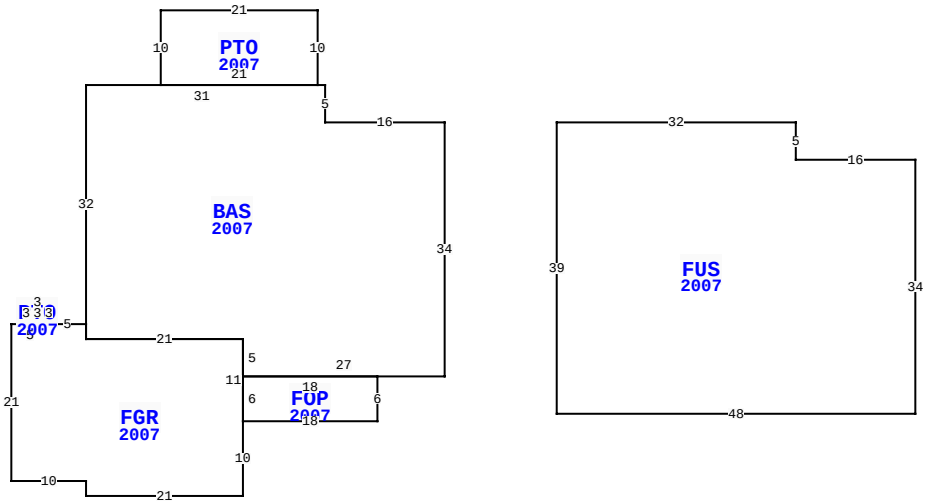

76402 TIMBERCREEK BLVD, YULEE

BLD DATE	02/12/2008 KK	LGL DATE	
XF DATE		LAND DATE	
INC DATE		AG DATE	

VALUATION SUMMARY

VALUATION BY		STANDARD
Tax Group: 4	Tax Dist:	
BUILDING MARKET VALUE		329,532
TOTAL MARKET OB/XF VALUE		5,996
TOTAL LAND VALUE - MARKET		55,000
TOTAL MARKET VALUE		390,528
SOH/AGL Deduction		97,292
ASSESSED VALUE		293,236
TOTAL EXEMPTION VALUE	HX HB	50,000
BASE TAXABLE VALUE		243,236
TOTAL JUST VALUE		390,528
NCON VALUE		0
INCOME VALUE		
PREVIOUS YEAR MKT VALUE		375,811

PERMIT NUM	DESCRIPTION	AMT	ISSUED
22007881	REPAIR/RRF	18,936	05/20/2022
E19352	ELEC OTHER	1,500	06/01/2007
M12947	MECH OTHER	0	05/01/2007
C19749	CO ISSUED	289,080	04/01/2007
B19749	NEW CONSTR	289,080	04/01/2007
P12321	OTHER	0	04/01/2007

SALES DATA

OFF RECORD Number	DATE	TYPE INST	Q / U	V / I	RSN CD	SALE PRICE
2697/686	2/23/2024	WD	Q	I	01	470,000
GRANTOR: MESKIMEN MATHEW D & J						
GRANTEE: HATTON THOMAS & JAM						
2273/0780	5/02/2019	WD	Q	I	02	310,000
GRANTOR: PEDERSEN APOLLO SCOTT						
GRANTEE: MESKIMEN MATHEW D &						

BUILDING NOTES

BUILDING DIMENSIONS

BAS=[YR=2007] W16 N5 W1 PTO=[YR=2007] N10 W21 S10 E21$ W31 S32 FGR=[YR=2007] W5 PTO=[YR=2007] N3 W3 S3 E3$ W5 S21 E10 S2 E21 N10 FOP=[YR=2007] E18 N6 W18 S6$ N11 W21 N2$ S2 E21 S5 E27 N34$ PTR=E15 FUS=[YR=2007] E32 S5 E16 S34 W48 N39$ W15$.

EXTRA FEATURES

LN	OB/XF CODE	DESCRIPTION	BLD	CAP	L	W	UNITS	UT	Adj R	ADJ UNIT PRICE	ORIG COND	YEAR ON	YEAR ACTUAL	Q	% COND	OB/XF MKT VALUE	NOTES
1	0812	CONCRETE C	0	100	0	0	1,567.00	SF	4.00	4.00	100	2007	2007	3	88	5,516	
2	0810	CONCRETE A	0	100	28	3	84.00	SF	6.50	6.50	100	2007	2007	3	88	480	

LAND DESCRIPTION

TOTAL OB/XF 5,996

LN	USE CODE	CLS	LAND USE DESCRIPTION	CAP	RD	LOC ZONE	FRONT	DEPTH	TOT LND UTS	UNIT TYPE	DT	DPTH FACT	% COND	TOT ADJ	UNIT PRICE	ADJ UNIT PRICE	LAND VALUE	OTHER ADJUSTMENTS AND NOTES	YEAR	DENSITY	DECL	FRZ	YR	CONSRV
1	000100	C	SFR	100	0003	PUD	0.00	0.00	1.00	LT		1.00	1.00	1.00	55,000.00	55,000.00	55,000							

REVIEW DATE 05/12/2019 BY KBA Total Acres: 0.00 Total Land Value: 55,000 Market: 0 Agricultural: 0 Common: 55,000 PRINTED 08/06/2024 BY SYS