LOT 123
IN OR 2210/1053
TIMBER CREEK PLANTATION #2

LOPEZ ABIGAIL
76429 TIMBERCREEK BLVD
YULEE, FL 32097

**2024**

**11-2N-26-2051-0123-0000**

## BUILDING CHARACTERISTICS

| ELEMENT | CD | CONSTRUCTION |
|---|---|---|
| Exterior Wall | 16 | WD FR STUC 100 |
| Roof Structur | 03 | GABLE/HIP 100 |
| Roof Cover | 03 | COMP SHNGL 100 |
| Interior Wall | 05 | DRYWALL 100 |
| Interior Floo | 14 | CARPET 70 |
| Interior Floo | 11 | CLAY TILE 30 |
| Air Condition | 03 | CENTRAL 100 |
| Heating Type | 04 | AIR DUCTED 100 |
| Bedrooms | | 3 100 |
| Bathrooms | | 2 100 |
| Frame | 02 | WOOD FRAME 100 |
| Stories | 1. | 1. 100 |
| Units | | 0 100 |
| Occupancy | 00 | NONE 100 |
| Quality | 03 | Quality Level 03 |
| DOR CODE | 0100 | SINGLE FAMILY |
| MAP NUM | | MKT AREA 05 |
| NEIGHBORHOOD/LOC | 5005.00 | |

| AREA TYPE | TOTAL GROSS AREA | PCT OF BASE | TOT ADJ AREA | SUBAREA MARKET VALUE |
|---|---|---|---|---|
| BAS | 1,853 | 100 | 1,853 | 178,568 |
| FGR | 725 | 55 | 399 | 38,450 |
| FOP | 15 | 30 | 4 | 386 |
| FOP | 70 | 30 | 21 | 2,024 |
| PTO | 210 | 5 | 10 | 964 |
| TOTALS | 2,873 | | 2,287 | 220,390 |

## MARKET ADJUSTMENTS

| TYPE | MDL | EFF. AREA | TOT ADJ PTS | EFF. BASE RATE | REPL. COST NEW | AYB | EYB | ECON | FNCT | | NORM | % COND |
|---|---|---|---|---|---|---|---|---|---|---|---|---|
| 0100 | 01 | 2,287 | 109.6620 | 104.18 | 238,260 | 2008 | 2008 | 0 | 0 | 0 | 7.50 | 92.50 |

1 SINGLE FAM – 100% - 2009 Heated Area: 1853 HX Base Yr 2009

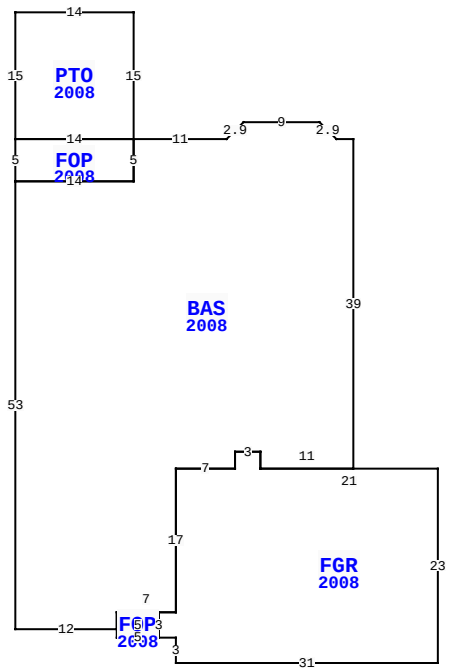


76429 TIMBERCREEK BLVD, YULEE

| | | | |
|---|---|---|---|
| BLD DATE | 04/16/2008 | KK | LGL DATE |
| XF DATE | | | LAND DATE |
| INC DATE | | | AG DATE |

## NASSAU COUNTY PROPERTY

PAGE 1 of 1 4

### VALUATION SUMMARY

| | | |
|---|---|---|
| VALUATION BY | | STANDARD |
| Tax Group: 4 | Tax Dist: | |
| BUILDING MARKET VALUE | | 220,390 |
| TOTAL MARKET OB/XF VALUE | | 7,100 |
| TOTAL LAND VALUE - MARKET | | 55,000 |
| TOTAL MARKET VALUE | | 282,490 |
| SOH/AGL Deduction | | 120,381 |
| ASSESSED VALUE | | 162,109 |
| TOTAL EXEMPTION VALUE | HX HB VX | 55,000 |
| BASE TAXABLE VALUE | | 107,109 |
| TOTAL JUST VALUE | | 282,490 |
| NCON VALUE | | 0 |
| INCOME VALUE | | |
| PREVIOUS YEAR MKT VALUE | | 272,679 |

| PERMIT NUM | DESCRIPTION | AMT | ISSUED |
|---|---|---|---|
| M13609 | MECH OTHER | 0 | 02/01/2008 |
| C21003 | CO ISSUED | 180,246 | 01/01/2008 |
| R10986 | REPAIR/RRF | 2,000 | 01/01/2008 |
| P12990 | OTHER | 0 | 01/01/2008 |
| B21003 | NEW CONSTR | 180,246 | 01/01/2008 |

## SALES DATA

| OFF RECORD Number | DATE | TYPE INST | Q U | V I | RSN CD | SALE PRICE |
|---|---|---|---|---|---|---|
| 2210/1053 | 6/14/2018 | WD | U | I | 11 | 100 |
| GRANTOR: MELENDEZ JOSE | | | | | | |
| GRANTEE: LOPEZ ABIGAIL | | | | | | |
| 1564/0456 | 4/30/2008 | WD | Q | I | | 236,300 |
| GRANTOR: KB HOME JACKSONVILLE | | | | | | |
| GRANTEE: MELENDEZ JOSE & ABI | | | | | | |

## BUILDING NOTES

## BUILDING DIMENSIONS

BAS=[YR=2008] W2 U2 L2 W9 D2 L2 W11 PTO=[YR=2008] N15 W14 S15 E14$ FOP=[YR=2008] W14 S5 E14 N5 $ S5 W14 S53E12 FOP=[YR=2008] S1 E5 FGR=[YR=2008] E2 S3 E31 N23 W21 N2 W3 S2 W7 S17 W2 S3$ N3 W5 S2$ N2 E7 N17 E7 N2 E3 S2 E11 N39$.

## EXTRA FEATURES

| LN | OB/XF CODE | DESCRIPTION | BLD | CAP | L | W | UNITS | UT | Adj R | ADJ UNIT PRICE | ORIG COND | YEAR ON | YEAR ACTUAL | Q | % COND | OB/XF MKT VALUE | NOTES |
|---|---|---|---|---|---|---|---|---|---|---|---|---|---|---|---|---|---|
| 1 | 0504 | FP-ELECTRI | 0 | 100 | 0 | 0 | 1.00 | UT | 2,000.00 | 2,000.00 | 100 | 2008 | 2008 | 3 | 92 | 1,840 | |
| 2 | 0812 | CONCRETE C | 0 | 100 | 0 | 0 | 1,424.00 | SF | 4.00 | 4.00 | 100 | 2008 | 2008 | 3 | 89 | 5,069 | |
| 3 | 0810 | CONCRETE A | 0 | 100 | 11 | 3 | 33.00 | SF | 6.50 | 6.50 | 100 | 2008 | 2008 | 3 | 89 | 191 | |

## LAND DESCRIPTION

TOTAL OB/XF 7,100

| LN | USE CODE | CLS | LAND USE DESCRIPTION | CAP | RD | LOC ZONE | FRONT | DEPTH | TOT LND UTS | UNIT TYPE | DT | DPTH FACT | % COND | TOT ADJ | UNIT PRICE | ADJ UNIT PRICE | LAND VALUE | OTHER ADJUSTMENTS AND NOTES | YEAR | DENSITY | DECL | FRZ | YR | CONSRV |
|---|---|---|---|---|---|---|---|---|---|---|---|---|---|---|---|---|---|---|---|---|---|---|---|---|
| 1 | 000100 | C | SFR | 100 | 0003 | PUD | 0.00 | 0.00 | 1.00 | LT | | 1.00 | 1.00 | 1.00 | 55,000.00 | 55,000.00 | 55,000 | | | | | | | |

REVIEW DATE 05/12/2019 BY KBA Total Acres: 0.00 Total Land Value: 55,000 Market: 0 Agricultural: 0 Common: 55,000 PRINTED 08/06/2024 BY SYS