LOT 55
TIMBER CREEK PLANTATION #2
PB 7/165

NEY LOUIS MICHAEL & LATONYA ROSE
75369 RAVENWOOD DRIVE
YULEE, FL 32097

2024

11-2N-26-2051-0055-0000

BUILDING CHARACTERISTICS

ELEMENT	CD	CONSTRUCTION
Exterior Wall	16	WD FR STUC 100
Roof Structur	03	GABLE/HIP 100
Roof Cover	03	COMP SHNGL 100
Interior Wall	05	DRYWALL 100
Interior Floo	14	CARPET 80
Interior Floo	08	SHT VINYL 20
Air Condition	03	CENTRAL 100
Heating Type	04	AIR DUCTED 100
Bedrooms		3 100
Bathrooms		2.5 100
Frame	02	WOOD FRAME 100
Stories	2.	2. 100
Units		0 100
Occupancy	00	NONE 100
Quality	03	Quality Level 03
DOR CODE	0100	SINGLE FAMILY
MAP NUM		MKT AREA 05
NEIGHBORHOOD/LOC	5005.00	

AREA TYPE	TOTAL GROSS AREA	PCT OF BASE	TOT ADJ AREA	SUBAREA MARKET VALUE
BAS	1,583	100	1,583	130,042
FGR	423	55	233	19,141
FOP	52	30	16	1,314
FUS	1,732	100	1,732	142,282
PTO	18	5	1	82
TOTALS	3,808		3,565	292,860

MARKET ADJUSTMENTS

TYPE	MDL	EFF. AREA	TOT ADJ PTS	EFF. BASE RATE	REPL. COST NEW	AYB	EYB	ECON	FNCT		NORM	% COND
0100	01	3,565	94.5000	89.78	320,066	2006	2006	0	0	0	8.50	91.50

1 SINGLE FAM – 0% - 2023 Heated Area: 3315 HX Base Yr

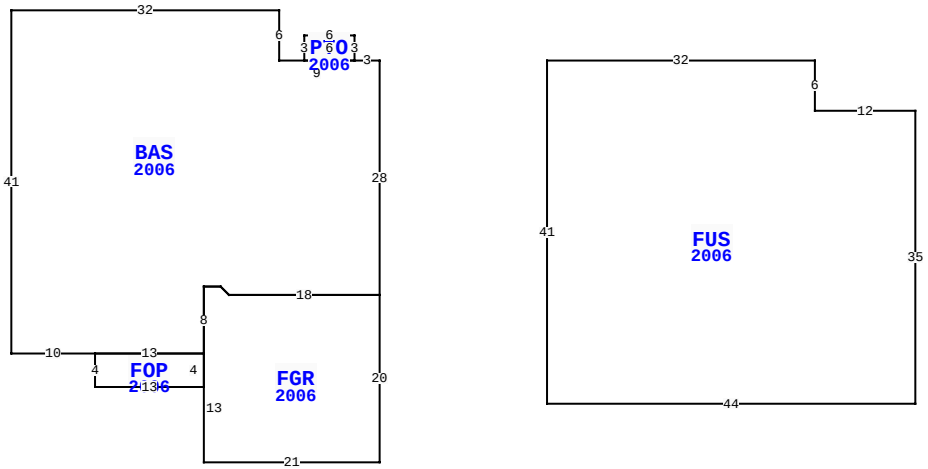

75369 RAVENWOOD DR, YULEE

BLD DATE	02/27/2007	JM	LGL DATE	
XF DATE	02/27/2007	JM	LAND DATE	02/27/2007 JM
INC DATE			AG DATE	

NASSAU COUNTY PROPERTY

PAGE 1 of 1 4

VALUATION SUMMARY

VALUATION BY	STANDARD
Tax Group: 4	Tax Dist:
BUILDING MARKET VALUE	292,860
TOTAL MARKET OB/XF VALUE	3,352
TOTAL LAND VALUE - MARKET	55,000
TOTAL MARKET VALUE	351,212
SOH/AGL Deduction	0
ASSESSED VALUE	351,212
TOTAL EXEMPTION VALUE	0
BASE TAXABLE VALUE	351,212
TOTAL JUST VALUE	351,212
NCON VALUE	0
INCOME VALUE	
PREVIOUS YEAR MKT VALUE	338,125

PERMIT NUM	DESCRIPTION	AMT	ISSUED
M11783	MECH OTHER	0	07/01/2006
E0617432	ELEC OTHER	1,500	06/01/2006
C17767	CO ISSUED	228,253	05/01/2006
P11148	OTHER	0	05/01/2006
R09307	REPAIR/RRF	2,000	05/01/2006
B17767	NEW CONSTR	228,253	05/01/2006

SALES DATA

OFF RECORD Number	DATE	TYPE INST	Q / U	V / I	RSN CD	SALE PRICE
2554/1168	4/08/2022	WD	Q	I	01	415,000
GRANTOR: HARDEE MICHAEL						
GRANTEE: NEY LOUIS MICHAEL &						
1596/1915	12/12/2008	WD	U	I	05	187,000
GRANTOR: BANK OF NEW YORK						
GRANTEE: HARDEE MICHAEL						

BUILDING NOTES

BUILDING DIMENSIONS

BAS=[YR=2006] W3 PTO=[YR=2006] N3 W6 S3 E6 $ W9 N6 W32 S41 E10 FOP=[YR=2006] S4 E13 N4 W13$ E13 FGR=[YR=2006] S13 E 21 N20 W18 L1 U1 W2 S8$ N8 E2 D1 R1 E18 N28$ PTR=E20 FUS2006=E32 S6 E12 S35 W44 N41$ W20 $.

EXTRA FEATURES

LN	OB/XF CODE	DESCRIPTION	BLD	CAP	L	W	UNITS	UT	Adj R	ADJ UNIT PRICE	ORIG COND	YEAR ON	YEAR ACTUAL	Q	% COND	OB/XF MKT VALUE	NOTES
1	0811	CONCRETE B	0	0	0	0	741.00	SF	5.20	5.20	100	2006	2006	3	87	3,352	

LAND DESCRIPTION

TOTAL OB/XF 3,352

LN	USE CODE	CLS	LAND USE DESCRIPTION	CAP	RD	LOC ZONE	FRONT	DEPTH	TOT LND UTS	UNIT TYPE	DT	DPTH FACT	% COND	TOT ADJ	UNIT PRICE	ADJ UNIT PRICE	LAND VALUE	OTHER ADJUSTMENTS AND NOTES	YEAR	DENSITY	DECL	FRZ	YR	CONSRV
1	000100	C	SFR	0	0003	PUD	0.00	0.00	1.00	LT		1.00	1.00	1.00	55,000.00	55,000.00	55,000							

REVIEW DATE 05/12/2019 BY KBA Total Acres: 0.00 Total Land Value: 55,000 Market: 0 Agricultural: 0 Common: 55,000 PRINTED 08/06/2024 BY SYS