LOT 11
IN OR 1541/1396
TIMBER CREEK PLANTATION #2

GATTI JUAN & CHERIDAH
76435 DEERWOOD DRIVE
YULEE, FL 32097

2024

11-2N-26-2051-0011-0000

BUILDING CHARACTERISTICS

ELEMENT	CD	CONSTRUCTION
Exterior Wall	16	WD FR STUC 100
Roof Structur	03	GABLE/HIP 100
Roof Cover	03	COMP SHNGL 100
Interior Wall	05	DRYWALL 100
Interior Floo	14	CARPET 80
Interior Floo	08	SHT VINYL 20
Air Condition	03	CENTRAL 100
Heating Type	04	AIR DUCTED 100
Bedrooms		5 100
Bathrooms		3 100
Frame	02	WOOD FRAME 100
Stories	2.	2. 100
Units		0 100
Occupancy	00	NONE 100
Quality	03	Quality Level 03
DOR CODE	0100	SINGLE FAMILY
MAP NUM		MKT AREA 05
NEIGHBORHOOD/LOC	5005.00	

AREA TYPE	TOTAL GROSS AREA	PCT OF BASE	TOT ADJ AREA	SUBAREA MARKET VALUE
BAS	1,621	100	1,621	136,426
FGR	428	55	235	19,778
FOP	60	30	18	1,515
FUS	1,776	100	1,776	149,471
PTO	192	5	10	842
TOTALS	4,077		3,660	308,032

MARKET ADJUSTMENTS

TYPE	MDL	EFF. AREA	TOT ADJ PTS	EFF. BASE RATE	REPL. COST NEW	AYB	EYB	ECON	FNCT		NORM	% COND
0100	01	3,660	96.3000	91.48	334,817	2007	2007	0	0	0	8.00	92.00

1 SINGLE FAM – 100% - 2008 Heated Area: 3397 HX Base Yr 2008

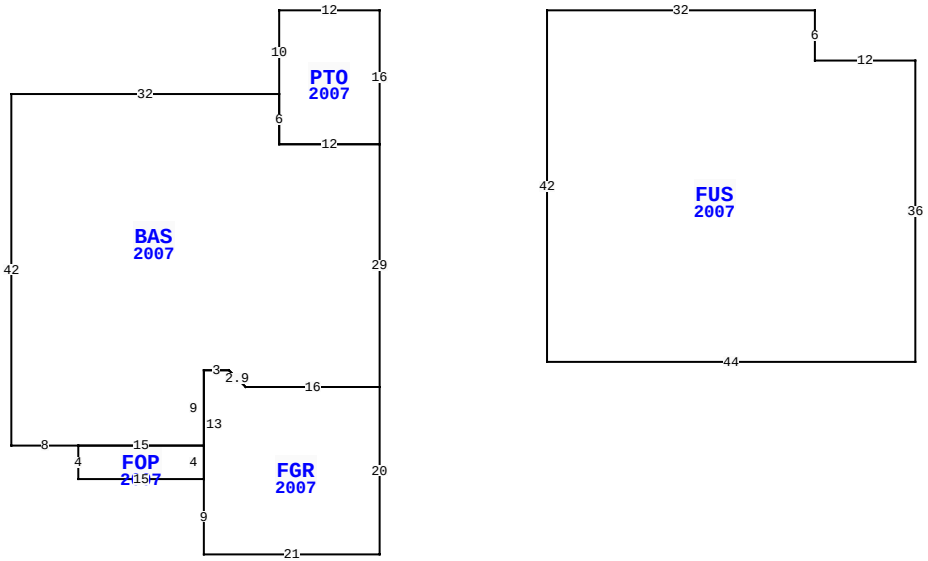

76435 DEERWOOD DR, YULEE

BLD DATE	11/01/2007 JM	LGL DATE	
XF DATE		LAND DATE	
INC DATE		AG DATE	

NASSAU COUNTY PROPERTY

PAGE 1 of 1 4

VALUATION SUMMARY

VALUATION BY		STANDARD
Tax Group: 4	Tax Dist:	
BUILDING MARKET VALUE		308,032
TOTAL MARKET OB/XF VALUE		3,203
TOTAL LAND VALUE - MARKET		55,000
TOTAL MARKET VALUE		366,235
SOH/AGL Deduction		156,197
ASSESSED VALUE		210,038
TOTAL EXEMPTION VALUE	HX HB	50,000
BASE TAXABLE VALUE		160,038
TOTAL JUST VALUE		366,235
NCON VALUE		0
INCOME VALUE		
PREVIOUS YEAR MKT VALUE		352,474

PERMIT NUM	DESCRIPTION	AMT	ISSUED
E19673	ELEC OTHER	1,500	07/01/2007
M13130	MECH OTHER	0	07/01/2007
C20105	CO ISSUED	0	06/01/2007
R10488	REPAIR/RRF	2,000	06/01/2007
B20105	NEW CONSTR	259,512	06/01/2007

SALES DATA

OFF RECORD Number	DATE	TYPE INST	Q / U	V / I	RSN CD	SALE PRICE
1541/1396	12/20/2007	WD	Q	I		244,000
GRANTOR: KB HOME JACKSONVILLE						
GRANTEE: GATTI JUAN & CHERID						
1494/1179	4/24/2007	WD	U	V	19	187,500
GRANTOR: TIMBER CREEK LLC						
GRANTEE: KB HOME JACKSONVILL						

BUILDING NOTES

BUILDING DIMENSIONS

PTO=[YR=2007] W12 S10 BAS=[YR=2007] W32 S42 E8 FOP=[YR=2007] S4 E15 FGR=[YR=2007] S9 E21 N20 W16 L2 U2 W3 S13$ N4 W15$ E15 N9 E3 D2 R2 E16 N29 W12 N6$ S6 E12 N16 $ PTR= E20 FUS=[YR=2007] E32 S6 E12 S36 W44 N42$ W20$.

EXTRA FEATURES

LN	OB/XF CODE	DESCRIPTION	BLD	CAP	L	W	UNITS	UT	Adj R	ADJ UNIT PRICE	ORIG COND	YEAR ON	YEAR ACTUAL	Q	% COND	OB/XF MKT VALUE	NOTES
1	0811	CONCRETE B	0	100	0	0	700.00	SF	5.20	5.20	100	2007	2007	3	88	3,203	

LAND DESCRIPTION

TOTAL OB/XF 3,203

LN	USE CODE	CLS	LAND USE DESCRIPTION	CAP	RD	LOC ZONE	FRONT	DEPTH	TOT LND UTS	UNIT TYPE	DT	DPTH FACT	% COND	TOT ADJ	UNIT PRICE	ADJ UNIT PRICE	LAND VALUE	OTHER ADJUSTMENTS AND NOTES	YEAR	DENSITY	DECL	FRZ	YR	CONSRV
1	000100	C	SFR	100	0003	PUD	0.00	0.00	1.00	LT		1.00	1.00	1.00	55,000.00	55,000.00	55,000							

REVIEW DATE 05/12/2019 BY KBA Total Acres: 0.00 Total Land Value: 55,000 Market: 0 Agricultural: 0 Common: 55,000 PRINTED 08/06/2024 BY SYS