LOT 201
TIMBER CREEK PLANTATION #1
PB 6/394

NAPIER GARY W & IRIS S
76175 DEERWOOD DR
YULEE, FL 32097

2024

11-2N-26-2050-0201-0000

NASSAU COUNTY PROPERTY

BUILDING CHARACTERISTICS

ELEMENT	CD	CONSTRUCTION
Exterior Wall	16	WD FR STUC 100
Roof Structur	03	GABLE/HIP 100
Roof Cover	03	COMP SHNGL 100
Interior Wall	05	DRYWALL 100
Interior Floo	14	CARPET 60
Interior Floo	11	CLAY TILE 40
Air Condition	03	CENTRAL 100
Heating Type	04	AIR DUCTED 100
Bedrooms		3 100
Bathrooms		2.5 100
Frame	02	WOOD FRAME 100
Stories	2.	2. 100
Units		0 100
Occupancy	00	NONE 100
Quality	03	Quality Level 03

DOR CODE 0100 SINGLE FAMILY
MAP NUM | MKT AREA 05
NEIGHBORHOOD/LOC 5005.00

AREA TYPE	TOTAL GROSS AREA	PCT OF BASE	TOT ADJ AREA	SUBAREA MARKET VALUE
BAS	1,041	100	1,041	95,433
FGR	657	55	361	33,095
FOP	35	30	10	917
FOP	308	30	92	8,434
FUS	1,488	100	1,488	136,411
TOTALS	3,529		2,992	274,288

MARKET ADJUSTMENTS

TYPE	MDL	EFF. AREA	TOT ADJ PTS	EFF. BASE RATE	REPL. COST NEW	AYB	EYB	ECON	FNCT		NORM	% COND
0100	01	2,992	105.4680	100.19	299,768	2006	2006	0	0	0	8.50	91.50

1 SINGLE FAM – 100% - 2020 Heated Area: 2529 HX Base Yr 2020

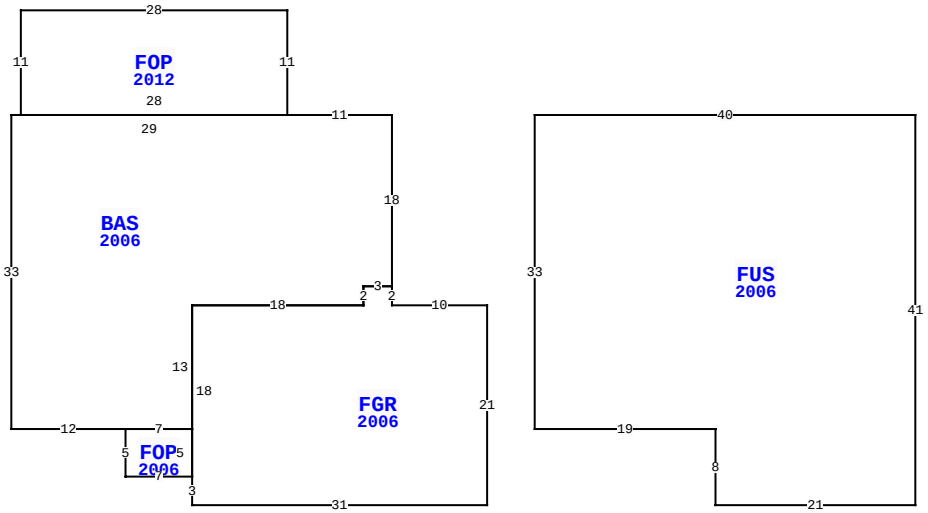

76175 DEERWOOD DR, YULEE

BLD DATE	02/05/2013	KK	LGL DATE
XF DATE	03/21/2007	RK	LAND DATE
INC DATE			AG DATE

VALUATION SUMMARY

VALUATION BY		STANDARD
Tax Group: 4	Tax Dist:	
BUILDING MARKET VALUE		274,288
TOTAL MARKET OB/XF VALUE		4,225
TOTAL LAND VALUE - MARKET		55,000
TOTAL MARKET VALUE		333,513
SOH/AGL Deduction		110,733
ASSESSED VALUE		222,780
TOTAL EXEMPTION VALUE	HX HB	50,000
BASE TAXABLE VALUE		172,780
TOTAL JUST VALUE		333,513
NCON VALUE		0
INCOME VALUE		
PREVIOUS YEAR MKT VALUE		321,270

PERMIT NUM	DESCRIPTION	AMT	ISSUED
C16249	CO ISSUED	184,457	01/01/2006
M10926	MECH OTHER	0	01/01/2006
E16483	ELEC OTHER	1,500	01/01/2006
B16249	NEW CONSTR	184,457	01/01/2006
P10339	OTHER	0	11/01/2005
R08348	REPAIR/RRF	2,000	10/01/2005

SALES DATA

OFF RECORD Number	DATE	TYPE INST	Q U	V I	RSN CD	SALE PRICE
2290/0117	7/12/2019	SW	Q	I	01	236,900
GRANTOR: AMERICAN HOMES 4 RENT						
GRANTEE: NAPIER GARY W & IRI						
1842/1408	1/30/2013	WD	Q	I	02	125,000
GRANTOR: THE BANK OF NEW YORK						
GRANTEE: AMERICAN HOMES 4 RE						

BUILDING NOTES

BUILDING DIMENSIONS

BAS=[YR=2006] W11 FOP=[YR=2012] N11 W28 S11 E28$ W29 S33 E12 FOP=[YR=2006] S5 E7 FGR=[YR=2006] S3 E31 N21 W10 N2 W3 S2 W18 S18$ N5 W7$ E7 N13 E18 N2 E3 N18$ PTR=E15 FUS=[YR=2006] E40 S41 W21 N8 W19 N33$ W15$.

EXTRA FEATURES

LN	OB/XF CODE	DESCRIPTION	BLD	CAP	L	W	UNITS	UT	Adj R	ADJ UNIT PRICE	ORIG COND	YEAR ON	YEAR ACTUAL	Q	% COND	OB/XF MKT VALUE	NOTES
1	0812	CONCRETE C	0	100	0	0	1,214.00	SF	4.00	4.00	100	2006	2006	3	87	4,225	

LAND DESCRIPTION

TOTAL OB/XF 4,225

LN	USE CODE	CLS	LAND USE DESCRIPTION	CAP	RD	LOC ZONE	FRONT	DEPTH	TOT LND UTS	UNIT TYPE	DT	DPTH FACT	% COND	TOT ADJ	UNIT PRICE	ADJ UNIT PRICE	LAND VALUE	OTHER ADJUSTMENTS AND NOTES	YEAR	DENSITY	DECL	FRZ	YR	CONSRV
1	000100	C	SFR	100	0003	PUD	0.00	0.00	1.00	LT		1.00	1.00	1.00	55,000.00	55,000.00	55,000							

REVIEW DATE 05/12/2019 BY KBA Total Acres: 0.00 Total Land Value: 55,000 Market: 0 Agricultural: 0 Common: 55,000 PRINTED 08/06/2024 BY SYS