LOT 135
IN OR 1926/267
TIMBER CREEK PLANTATION #1

DAVIS JEREMY S & ERIKA L
76192 LONG LEAF LOOP
YULEE, FL 32097

2024

11-2N-26-2050-0135-0000

NASSAU COUNTY PROPERTY

BUILDING CHARACTERISTICS

ELEMENT	CD	CONSTRUCTION
Exterior Wall	16	WD FR STUC 50
Exterior Wall	17	CB STUCCO 50
Roof Structur	03	GABLE/HIP 100
Roof Cover	03	COMP SHNGL 100
Interior Wall	05	DRYWALL 100
Interior Floo	14	CARPET 80
Interior Floo	08	SHT VINYL 20
Air Condition	03	CENTRAL 100
Heating Type	04	AIR DUCTED 100
Bedrooms		4 100
Bathrooms		2.5 100
Frame	02	WOOD FRAME 100
Stories	2.	2. 100
Units		0 100
Occupancy	00	NONE 100
Quality	03	Quality Level 03
DOR CODE	0100	SINGLE FAMILY
MAP NUM		MKT AREA 05
NEIGHBORHOOD/LOC	5005.00	

AREA TYPE	TOTAL GROSS AREA	PCT OF BASE	TOT ADJ AREA	SUBAREA MARKET VALUE
BAS	1,120	100	1,120	100,850
FGR	441	55	243	21,881
FOP	21	30	6	541
FUS	1,125	100	1,125	101,300
USP	180	30	54	4,862
TOTALS	2,887		2,548	229,434

MARKET ADJUSTMENTS

TYPE	MDL	EFF. AREA	TOT ADJ PTS	EFF. BASE RATE	REPL. COST NEW	AYB	EYB	ECON	FNCT		NORM	% COND
0100	01	2,548	104.1600	98.95	252,125	2005	2005	0	0	0	9.00	91.00

1 SINGLE FAM – 100% - 2015 Heated Area: 2245 HX Base Yr 2015

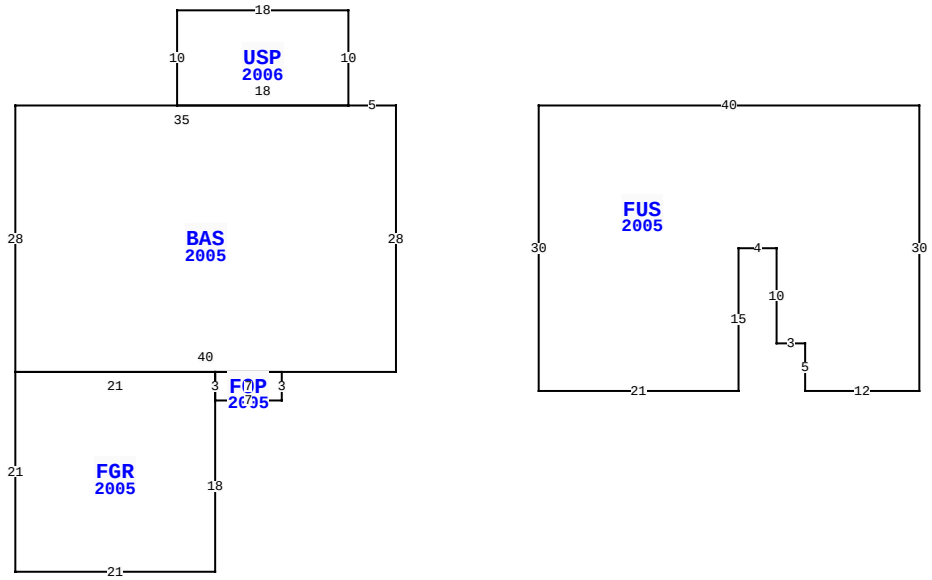

76192 LONG LEAF LOOP, YULEE

BLD DATE		LGL DATE	
XF DATE		LAND DATE	
INC DATE		AG DATE	

VALUATION SUMMARY

VALUATION BY		STANDARD
Tax Group: 4	Tax Dist:	
BUILDING MARKET VALUE		229,434
TOTAL MARKET OB/XF VALUE		3,202
TOTAL LAND VALUE - MARKET		55,000
TOTAL MARKET VALUE		287,636
SOH/AGL Deduction		102,212
ASSESSED VALUE		185,424
TOTAL EXEMPTION VALUE	HX HB	50,000
BASE TAXABLE VALUE		135,424
TOTAL JUST VALUE		287,636
NCON VALUE		0
INCOME VALUE		
PREVIOUS YEAR MKT VALUE		277,392

PERMIT NUM	DESCRIPTION	AMT	ISSUED
B0414115	NEW CONSTR	164,862	12/01/2005
P0408741	OTHER	0	12/01/2004
E0413934	ELEC OTHER	2,000	12/01/2004
M0408996	H/AC	0	12/01/2004
R046907	REPAIR/RRF	8,000	12/01/2004

SALES DATA

OFF RECORD Number	DATE	TYPE INST	Q U	V I	RSN CD	SALE PRICE
1926/0267	6/26/2014	WD	Q	I	01	179,000
GRANTOR: BASS KEVIN L & TONYA						
GRANTEE: DAVIS JEREMY S & ER						
1315/1698	5/09/2005	WD	Q	I		175,900
GRANTOR: MARONDA HOMES INC						
GRANTEE: BASS KEVIN L & TONY						

BUILDING NOTES

BUILDING DIMENSIONS

BAS=[YR=2005] W5 USP=[YR=2006] N10 W18 S10 E18$ W35 S28 FGR=[YR=2005] S21 E21 N18 FOP=[YR=2005] E7 N3 W7 S3$ N3 W21$ E40 N28$ PTR=E15 FUS=[YR=2005] E40 S30 W12 N5 W3 N10 W4 S15 W21 N30$ W15$.

EXTRA FEATURES

LN	OB/XF CODE	DESCRIPTION	BLD	CAP	L	W	UNITS	UT	Adj R	ADJ UNIT PRICE	ORIG COND	YEAR ON	YEAR ACTUAL	Q	% COND	OB/XF MKT VALUE	NOTES
1	0811	CONCRETE B	0	100	0	0	716.00	SF	5.20	5.20	100	2005	2005	3	86	3,202	

LAND DESCRIPTION

TOTAL OB/XF 3,202

LN	USE CODE	CLS	LAND USE DESCRIPTION	CAP	RD	LOC ZONE	FRONT	DEPTH	TOT LND UTS	UNIT TYPE	DT	DPTH FACT	% COND	TOT ADJ	UNIT PRICE	ADJ UNIT PRICE	LAND VALUE	OTHER ADJUSTMENTS AND NOTES	YEAR	DENSITY	DECL	FRZ	YR	CONSRV
1	000134	C	SFR POND	100	0003	PUD	0.00	0.00	1.00	LT		1.00	1.00	1.00	55,000.00	55,000.00	55,000							

REVIEW DATE 05/12/2019 BY KBA Total Acres: 0.00 Total Land Value: 55,000 Market: 0 Agricultural: 0 Common: 55,000 PRINTED 08/06/2024 BY SYS