LOT 38
IN OR 2189/969
TIMBER CREEK PLANTATION #1

EVANS ADAM & KRISTEN J
76051 TIDEVIEW LANE
YULEE, FL 32097

2024

11-2N-26-2050-0038-0000

NASSAU COUNTY PROPERTY

BUILDING CHARACTERISTICS

ELEMENT	CD	CONSTRUCTION
Exterior Wall	16	WD FR STUC 100
Roof Structur	08	IRREGULAR 100
Roof Cover	03	COMP SHNGL 100
Interior Wall	05	DRYWALL 100
Interior Floo	14	CARPET 80
Interior Floo	08	SHT VINYL 20
Air Condition	03	CENTRAL 100
Heating Type	04	AIR DUCTED 100
Bedrooms		3 100
Bathrooms		2 100
Frame	02	WOOD FRAME 100
Stories	1.	1. 100
Units		0 100
Occupancy	00	NONE 100
Quality	03	Quality Level 03
DOR CODE	0100	SINGLE FAMILY
MAP NUM		MKT AREA 05
NEIGHBORHOOD/LOC	5005.00	

AREA TYPE	TOTAL GROSS AREA	PCT OF BASE	TOT ADJ AREA	SUBAREA MARKET VALUE
BAS	2,241	100	2,241	203,842
FGR	651	55	358	32,564
FOP	96	30	29	2,638
FOP	96	30	29	2,638
PTO	80	5	4	364
TOTALS	3,164		2,661	242,045

MARKET ADJUSTMENTS

TYPE	MDL	EFF. AREA	TOT ADJ PTS	EFF. BASE RATE	REPL. COST NEW	AYB	EYB	ECON	FNCT		NORM	% COND
0100	01	2,661	104.6400	99.41	264,530	2006	2006	0	0	0	8.50	91.50

1 SINGLE FAM – 100% - 2024 Heated Area: 2241 HX Base Yr

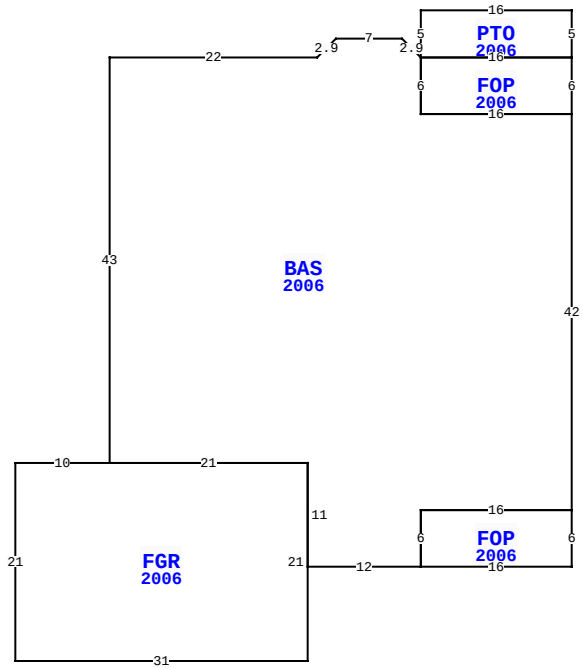

76051 TIDEVIEW LN, YULEE

BLD DATE		LGL DATE	
XF DATE		LAND DATE	
INC DATE		AG DATE	

VALUATION SUMMARY

VALUATION BY		STANDARD
Tax Group: 4	Tax Dist:	
BUILDING MARKET VALUE		242,045
TOTAL MARKET OB/XF VALUE		3,623
TOTAL LAND VALUE - MARKET		55,000
TOTAL MARKET VALUE		300,668
SOH/AGL Deduction		0
ASSESSED VALUE		300,668
TOTAL EXEMPTION VALUE	13	300,668
BASE TAXABLE VALUE		0
TOTAL JUST VALUE		300,668
NCON VALUE		0
INCOME VALUE		
PREVIOUS YEAR MKT VALUE		292,378

PERMIT NUM	DESCRIPTION	AMT	ISSUED
R229830	REPAIR/RRF	23,000	10/01/2022
B17438	NEW CONSTR	163,744	08/25/2006
C17438	CO ISSUED	163,744	05/01/2006
E17277	ELEC OTHER	1,500	05/01/2006
M11462	MECH OTHER	0	05/01/2006
P10953	OTHER	0	04/01/2006

SALES DATA

OFF RECORD Number	DATE	TYPE INST	Q U /	V I /	RSN CD	SALE PRICE
2189/0969	3/09/2018	SW	U	I	12	208,000
GRANTOR: REG HOLDERS OF 1ST FR						
GRANTEE: EVANS ADAM & KRISTE						
2166/0916	12/14/2017	CT	U	I	18	196,100
GRANTOR: CLERK OF COURT						
GRANTEE: FIRST FRANKLIN MORT						

BUILDING NOTES

BUILDING DIMENSIONS

BAS=[YR=2006] L2 U2 W7 D2 L2 W22 S43 FGR=[YR=2006] W10 S21 E31 N21 W21$ E21 S11 E12 FOP=[YR=2006] E16 N6 W16 S6$ N6 E16 N42 FOP=[YR=2006] N6 PTO=[YR=2006] N5 W16 S5 E16$ W16 S6 E16$ W16 N6$.

EXTRA FEATURES

LN	OB/XF CODE	DESCRIPTION	BLD	CAP	L	W	UNITS	UT	Adj R	ADJ UNIT PRICE	ORIG COND	YEAR ON	YEAR ACTUAL	Q	% COND	OB/XF MKT VALUE	NOTES
1	0812	CONCRETE C	0	100	0	0	1,041.00	SF	4.00	4.00	100	2006	2006	3	87	3,623	

LAND DESCRIPTION

TOTAL OB/XF 3,623

LN	USE CODE	CLS	LAND USE DESCRIPTION	CAP	RD	LOC ZONE	FRONT	DEPTH	TOT LND UTS	UNIT TYPE	DT	DPTH FACT	% COND	TOT ADJ	UNIT PRICE	ADJ UNIT PRICE	LAND VALUE	OTHER ADJUSTMENTS AND NOTES	YEAR	DENSITY	DECL	FRZ	YR	CONSRV
1	000100	C	SFR	100	0003	PUD	0.00	0.00	1.00	LT		1.00	1.00	1.00	55,000.00	55,000.00	55,000							

REVIEW DATE 05/12/2019 BY KBA Total Acres: 0.00 Total Land Value: 55,000 Market: 0 Agricultural: 0 Common: 55,000 PRINTED 08/06/2024 BY SYS