LOT 35
IN OR 1736/806
TIMBER CREEK PLANTATION #1

CUBBAL BRYCE M
76005 TIDEVIEW LANE
YULEE, FL 32097

2024

11-2N-26-2050-0035-0000

BUILDING CHARACTERISTICS

ELEMENT	CD	CONSTRUCTION
Exterior Wall	16	WD FR STUC 100
Roof Structur	08	IRREGULAR 100
Roof Cover	03	COMP SHNGL 100
Interior Wall	05	DRYWALL 100
Interior Floo	14	CARPET 80
Interior Floo	11	CLAY TILE 20
Air Condition	03	CENTRAL 100
Heating Type	04	AIR DUCTED 100
Bedrooms		3 100
Bathrooms		2.5 100
Frame	02	WOOD FRAME 100
Stories	2.	2. 100
Units		0 100
Occupancy	00	NONE 100
Quality	03	Quality Level 03
DOR CODE	0100	SINGLE FAMILY
MAP NUM		MKT AREA 05
NEIGHBORHOOD/LOC	5005.00	

AREA TYPE	TOTAL GROSS AREA	PCT OF BASE	TOT ADJ AREA	SUBAREA MARKET VALUE
BAS	1,043	100	1,043	95,960
FGR	655	55	360	33,121
FOP	40	30	12	1,104
FSP	250	40	100	9,200
FUS	1,425	100	1,425	131,105
PTO	240	5	12	1,104
TOTALS	3,653		2,952	271,594

MARKET ADJUSTMENTS

TYPE	MDL	EFF. AREA	TOT ADJ PTS	EFF. BASE RATE	REPL. COST NEW	AYB	EYB	ECON	FNCT		NORM	% COND
0100	01	2,952	105.8440	100.55	296,824	2006	2006	0	0	0	8.50	91.50

1 SINGLE FAM – 100% - 2012 Heated Area: 2468 HX Base Yr 2012

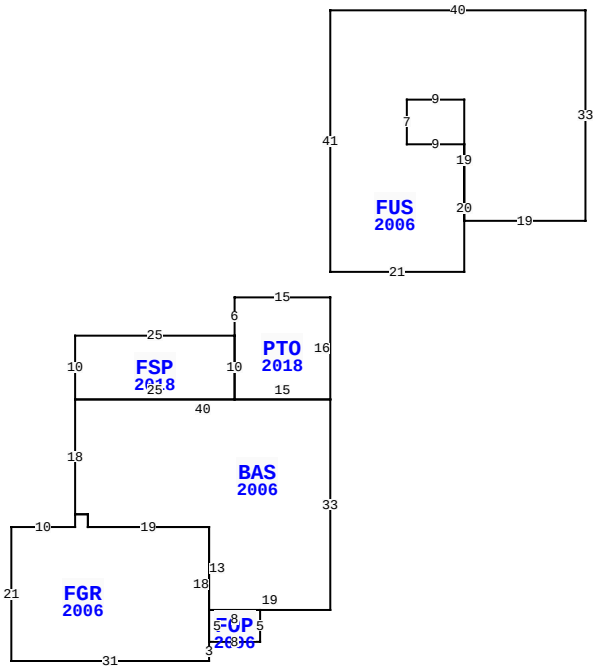

76005 TIDEVIEW LN, YULEE

BLD DATE	05/11/2012 KK	LGL DATE	
XF DATE		LAND DATE	
INC DATE		AG DATE	

NASSAU COUNTY PROPERTY

PAGE 1 of 1 4

VALUATION SUMMARY

VALUATION BY		STANDARD
Tax Group: 4	Tax Dist:	
BUILDING MARKET VALUE		271,594
TOTAL MARKET OB/XF VALUE		5,316
TOTAL LAND VALUE - MARKET		55,000
TOTAL MARKET VALUE		331,910
SOH/AGL Deduction		135,826
ASSESSED VALUE		196,084
TOTAL EXEMPTION VALUE	HX HB	50,000
BASE TAXABLE VALUE		146,084
TOTAL JUST VALUE		331,910
NCON VALUE		0
INCOME VALUE		
PREVIOUS YEAR MKT VALUE		319,793

PERMIT NUM	DESCRIPTION	AMT	ISSUED
17008255	XFOB	8,550	03/01/2018
B15955	NEW CONSTR	184,457	02/27/2006
E16184	ELEC OTHER	1,500	11/01/2005
M10581	MECH OTHER	0	11/01/2005
P10071	OTHER	0	09/01/2005
R08169	REPAIR/RRF	2,000	09/01/2005

SALES DATA

OFF RECORD Number	DATE	TYPE INST	Q U	V I	RSN CD	SALE PRICE
1736/0806	4/28/2011	WD	U	I	11	125,000
GRANTOR: FEDERAL NATIONAL MORT						
GRANTEE: CUBBAL BRYCE M						
1736/0804	4/14/2011	WD	U	I	12	100
GRANTOR: COUNTRYWIDE HOME LOAN						
GRANTEE: FEDERAL NATIONAL MO						

BUILDING NOTES

BUILDING DIMENSIONS

PTO=[YR=2018] N16 W15 S6 FSP=[YR=2018] W25 S10 BAS=[YR=2006] S18 FGR=[YR=2006] S2 W10 S21 E31 N3 FOP=[YR=2006] E8 N5 W8 S5$ N18 W19 N2 W2$ E2 S2 E19 S13 E19 N33 W40 $ E25 N10$ S10 E15 PTR=N20 FUS=[YR=2006] N41 E40 S33 W19 N19 W9S7 E9 S20 W21$ S20$.

EXTRA FEATURES

LN	OB/XF CODE	DESCRIPTION	BLD	CAP	L	W	UNITS	UT	Adj R	ADJ UNIT PRICE	ORIG COND	YEAR ON	YEAR ACTUAL	Q	% COND	OB/XF MKT VALUE	NOTES
1	0811	CONCRETE B	0	100	0	0	973.00	SF	5.20	5.20	100	2006	2006	3	87	4,402	
2	0810	CONCRETE A	0	100	0	0	145.00	SF	6.50	6.50	100	2018	2018	3	97	914	

LAND DESCRIPTION

TOTAL OB/XF 5,316

LN	USE CODE	CLS	LAND USE DESCRIPTION	CAP	RD	LOC ZONE	FRONT	DEPTH	TOT LND UTS	UNIT TYPE	DT	DPTH FACT	% COND	TOT ADJ	UNIT PRICE	ADJ UNIT PRICE	LAND VALUE	OTHER ADJUSTMENTS AND NOTES	YEAR	DENSITY	DECL	FRZ	YR	CONSRV
1	000100	C	SFR	100	0003	PUD	0.00	0.00	1.00	LT		1.00	1.00	1.00	55,000.00	55,000.00	55,000							

REVIEW DATE 06/03/2019 BY KBA Total Acres: 0.00 Total Land Value: 55,000 Market: 0 Agricultural: 0 Common: 55,000 PRINTED 08/06/2024 BY SYS