LOT 29
TIMBER CREEK PLANTATION #1
PB 6/394

ORFF JEFFREY H & HEATHER S
76038 TIDEVIEW LANE
YULEE, FL 32097

2024

11-2N-26-2050-0029-0000

NASSAU COUNTY PROPERTY

BUILDING CHARACTERISTICS

ELEMENT	CD	CONSTRUCTION
Exterior Wall	16	WD FR STUC 100
Roof Structur	03	GABLE/HIP 100
Roof Cover	03	COMP SHNGL 100
Interior Wall	05	DRYWALL 100
Interior Floo	14	CARPET 80
Interior Floo	08	SHT VINYL 20
Air Condition	03	CENTRAL 100
Heating Type	04	AIR DUCTED 100
Bedrooms		4 100
Bathrooms		2.5 100
Frame	02	WOOD FRAME 100
Stories	2.	2. 100
Units		0 100
Occupancy	00	NONE 100
Quality	03	Quality Level 03

DOR CODE 0100 SINGLE FAMILY
MAP NUM | MKT AREA 05
NEIGHBORHOOD/LOC 5005.00

AREA TYPE	TOTAL GROSS AREA	PCT OF BASE	TOT ADJ AREA	SUBAREA MARKET VALUE
BAS	1,176	100	1,176	100,082
FGR	651	55	358	30,467
FOP	27	30	8	681
FUS	1,386	100	1,386	117,953
USP	384	30	115	9,787
TOTALS	3,624		3,043	258,969

MARKET ADJUSTMENTS

TYPE	MDL	EFF. AREA	TOT ADJ PTS	EFF. BASE RATE	REPL. COST NEW	AYB	EYB	ECON	FNCT		NORM	% COND
0100	01	3,043	98.4400	93.52	284,581	2005	2005	0	0	0	9.00	91.00

1 SINGLE FAM – 100% - 2021 Heated Area: 2562 HX Base Yr 2021

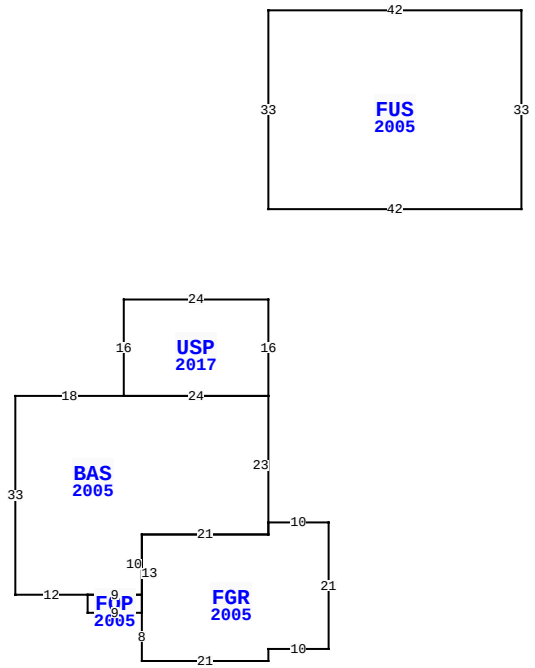

76038 TIDEVIEW LN, YULEE

BLD DATE		LGL DATE	
XF DATE		LAND DATE	
INC DATE		AG DATE	

VALUATION SUMMARY

VALUATION BY		STANDARD
Tax Group: 4	Tax Dist:	
BUILDING MARKET VALUE		258,969
TOTAL MARKET OB/XF VALUE		4,705
TOTAL LAND VALUE - MARKET		55,000
TOTAL MARKET VALUE		318,674
SOH/AGL Deduction		79,991
ASSESSED VALUE		238,683
TOTAL EXEMPTION VALUE	HX HB	50,000
BASE TAXABLE VALUE		188,683
TOTAL JUST VALUE		318,674
NCON VALUE		0
INCOME VALUE		
PREVIOUS YEAR MKT VALUE		307,120

PERMIT NUM	DESCRIPTION	AMT	ISSUED
22002988	REPAIR/RRF	20,352	02/23/2022
B1632724	REPAIR/RRF	6,250	07/01/2016
M09967	MECH OTHER	0	07/01/2005
E0514988	ELEC OTHER	1,500	05/01/2005
R0507584	REPAIR/RRF	2,000	05/01/2005
B0515160	NEW CONSTR	192,154	05/01/2005

SALES DATA

OFF RECORD Number	DATE	TYPE INST	Q / U	V / I	RSN CD	SALE PRICE
2321/0576	11/22/2019	WD	Q	I	01	270,000
GRANTOR: CARROLL GERALD P & MA						
GRANTEE: ORFF JEFFREY H & HE						
2172/0078	1/18/2018	WD	U	I	11	100
GRANTOR: CARROLL GERALD P & MA						
GRANTEE: CARROLL GERALD P &						

BUILDING NOTES

BUILDING DIMENSIONS

USP=[YR=2017] W24 S16 BAS=[YR=2005] W18 S33 E12 FOP=[YR=2005] S3 E9 FGR=[YR=2005] S8 E21 N2 E10 N21 W10 S2 W21 S13$ N3 W9$ E9 N10 E21 N23 W24 $ E24 N16$ PTR=N15 FUS=[YR=2005] N33 E42 S33 W42$ S15$.

EXTRA FEATURES

LN	OB/XF CODE	DESCRIPTION	BLD	CAP	L	W	UNITS	UT	Adj R	ADJ UNIT PRICE	ORIG COND	YEAR ON	YEAR ACTUAL	Q	% COND	OB/XF MKT VALUE	NOTES
1	0811	CONCRETE B	0	100	0	0	1,052.00	SF	5.20	5.20	100	2005	2005	3	86	4,705	

LAND DESCRIPTION

TOTAL OB/XF 4,705

LN	USE CODE	CLS	LAND USE DESCRIPTION	CAP	RD	LOC ZONE	FRONT	DEPTH	TOT LND UTS	UNIT TYPE	DT	DPTH FACT	% COND	TOT ADJ	UNIT PRICE	ADJ UNIT PRICE	LAND VALUE	OTHER ADJUSTMENTS AND NOTES	YEAR	DENSITY	DECL	FRZ	YR	CONSRV
1	000100	C	SFR	100	0003	PUD	0.00	0.00	1.00	LT		1.00	1.00	1.00	55,000.00	55,000.00	55,000							

REVIEW DATE 05/12/2019 BY KBA Total Acres: 0.00 Total Land Value: 55,000 Market: 0 Agricultural: 0 Common: 55,000 PRINTED 08/06/2024 BY SYS