LOT 23
IN OR 2095/1714
TIMBER CREEK PLANTATION #1

AH4R PROPERTIES LLC
30601 AGOURA RD STE 200
AGOURA HILLS, CA 91301

2024

11-2N-26-2050-0023-0000

BUILDING CHARACTERISTICS

ELEMENT	CD	CONSTRUCTION
Exterior Wall	16	WD FR STUC 100
Roof Structur	08	IRREGULAR 100
Roof Cover	03	COMP SHNGL 100
Interior Wall	05	DRYWALL 100
Interior Floo	14	CARPET 70
Interior Floo	08	SHT VINYL 30
Air Condition	03	CENTRAL 100
Heating Type	04	AIR DUCTED 100
Bedrooms		3 100
Bathrooms		2.5 100
Frame	02	WOOD FRAME 100
Stories	2.	2. 100
Units		0 100
Occupancy	00	NONE 100
Quality	03	Quality Level 03
DOR CODE	0100	SINGLE FAMILY
MAP NUM		MKT AREA 05
NEIGHBORHOOD/LOC	5005.00	

AREA TYPE	TOTAL GROSS AREA	PCT OF BASE	TOT ADJ AREA	SUBAREA MARKET VALUE
BAS	1,047	100	1,047	94,105
FGR	651	55	358	32,177
FOP	35	30	10	899
FUS	1,452	100	1,452	130,506
PTO	260	5	13	1,168
TOTALS	3,445		2,880	258,855

MARKET ADJUSTMENTS

TYPE	MDL	EFF. AREA	TOT ADJ PTS	EFF. BASE RATE	REPL. COST NEW	AYB	EYB	ECON	FNCT		NORM	% COND
0100	01	2,880	103.4000	98.23	282,902	2006	2006	0	0	0	8.50	91.50

1 SINGLE FAM – 0% - 0 Heated Area: 2499 HX Base Yr

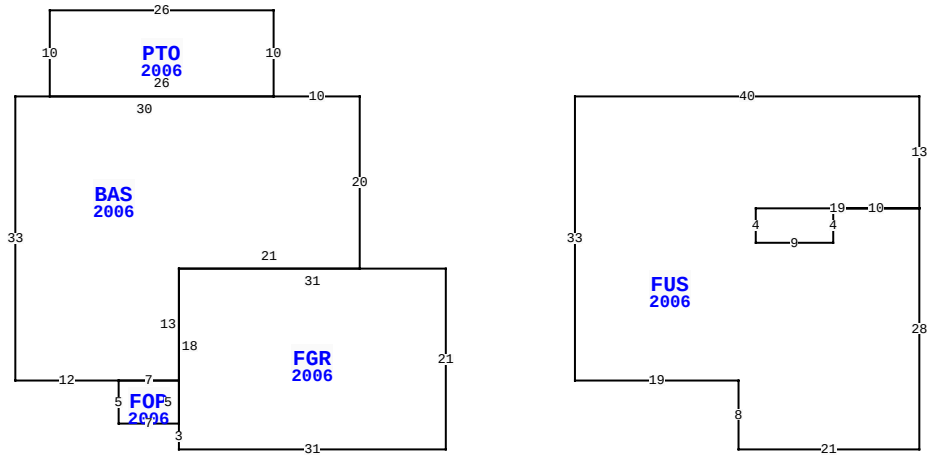

76134 TIDEVIEW LN, YULEE

BLD DATE		LGL DATE	
XF DATE		LAND DATE	
INC DATE		AG DATE	

NASSAU COUNTY PROPERTY

PAGE 1 of 1 4

VALUATION SUMMARY

VALUATION BY	STANDARD
Tax Group: 4	Tax Dist:
BUILDING MARKET VALUE	258,855
TOTAL MARKET OB/XF VALUE	4,510
TOTAL LAND VALUE - MARKET	55,000
TOTAL MARKET VALUE	318,365
SOH/AGL Deduction	14,098
ASSESSED VALUE	304,267
TOTAL EXEMPTION VALUE	0
BASE TAXABLE VALUE	304,267
TOTAL JUST VALUE	318,365
NCON VALUE	0
INCOME VALUE	
PREVIOUS YEAR MKT VALUE	306,823

PERMIT NUM	DESCRIPTION	AMT	ISSUED
C16058	CO ISSUED	184,457	01/01/2006
M10932	MECH OTHER	0	01/01/2006
E16485	ELEC OTHER	1,500	01/01/2006
B16058	NEW CONSTR	184,457	01/01/2006
P10151	OTHER	0	10/01/2005
R08225	REPAIR/RRF	0	09/01/2005

SALES DATA

OFF RECORD Number	DATE	TYPE INST	Q / U	V / I	RSN CD	SALE PRICE
2095/1714	1/23/2017	CT	U	I	18	178,700
GRANTOR: CLERK OF COURT						
GRANTEE: AH4R PROPERTIES LLC						
1422/1451	6/23/2006	WD	Q	I		283,500
GRANTOR: KB HOME JACKSONVILLE						
GRANTEE: SKAFF JANE						

BUILDING NOTES

BUILDING DIMENSIONS

BAS=[YR=2006] W10 PTO=[YR=2006] N10 W26 S10 E26$ W30 S33 E12 FOP=[YR=2006] S5 E7 FGR=[YR=2006] S3 E31 N21 W31 S18$ N5 W7$ E7 N13 E21 N20$ PTR=E25 FUS=[YR=2006] E40 S13 W19 S4 E9 N4 E10 S28 W21 N8 W19 N33$ W25$.

EXTRA FEATURES

LN	OB/XF CODE	DESCRIPTION	BLD	CAP	L	W	UNITS	UT	Adj R	ADJ UNIT PRICE	ORIG COND	YEAR ON	YEAR ACTUAL	Q	% COND	OB/XF MKT VALUE	NOTES
1	0811	CONCRETE B	0	0	0	0	997.00	SF	5.20	5.20	100	2006	2006	3	87	4,510	

LAND DESCRIPTION

TOTAL OB/XF 4,510

LN	USE CODE	CLS	LAND USE DESCRIPTION	CAP	RD	LOC ZONE	FRONT	DEPTH	TOT LND UTS	UNIT TYPE	DT	DPTH FACT	% COND	TOT ADJ	UNIT PRICE	ADJ UNIT PRICE	LAND VALUE	OTHER ADJUSTMENTS AND NOTES	YEAR	DENSITY	DECL	FRZ	YR	CONSRV
1	000100	C	SFR	0	0003	PUD	0.00	0.00	1.00	LT		1.00	1.00	1.00	55,000.00	55,000.00	55,000							

REVIEW DATE 05/12/2019 BY KBA Total Acres: 0.00 Total Land Value: 55,000 Market: 0 Agricultural: 0 Common: 55,000 PRINTED 08/06/2024 BY SYS