LOT 20
TIMBER CREEK PLANTATION #1
PB 6/394

WISDOM NATHAN A & LINDSEY N
76180 TIDEVIEW LANE
YULEE, FL 32097

2024

11-2N-26-2050-0020-0000

NASSAU COUNTY PROPERTY

BUILDING CHARACTERISTICS

ELEMENT	CD	CONSTRUCTION
Exterior Wall	16	WD FR STUC 100
Roof Structur	03	GABLE/HIP 100
Roof Cover	03	COMP SHNGL 100
Interior Wall	05	DRYWALL 100
Interior Floo	13	LVT/LAMNT 50
Interior Floo	14	CARPET 50
Air Condition	03	CENTRAL 100
Heating Type	04	AIR DUCTED 100
Bedrooms		3 100
Bathrooms		2.5 100
Frame	02	WOOD FRAME 100
Stories	2.	2. 100
Units		0 100
Quality	03	Quality Level 03

DOR CODE 0100 SINGLE FAMILY
MAP NUM | MKT AREA 05
NEIGHBORHOOD/LOC 5005.00

AREA TYPE	TOTAL GROSS AREA	PCT OF BASE	TOT ADJ AREA	SUBAREA MARKET VALUE
BAS	1,562	100	1,562	128,823
FGR	653	55	359	29,608
FOP	48	30	14	1,155
FOP	72	30	22	1,815
FUS	1,732	100	1,732	142,844
TOTALS	4,067		3,689	304,244

MARKET ADJUSTMENTS

TYPE	MDL	EFF. AREA	TOT ADJ PTS	EFF. BASE RATE	REPL. COST NEW	AYB	EYB	ECON	FNCT		NORM	% COND
0100	01	3,689	95.4000	90.63	334,334	2005	2005	0	0	0	9.00	91.00

1 SINGLE FAM – 100% - 2023 Heated Area: 3294 HX Base Yr 2023

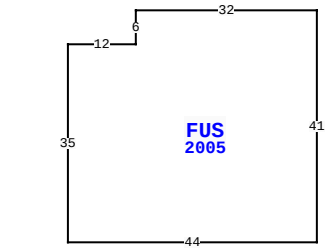

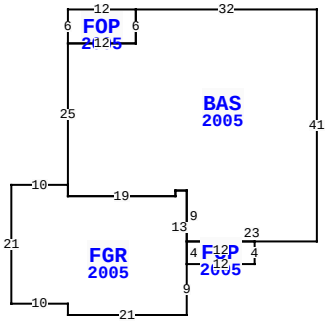

76180 TIDEVIEW LN, YULEE

BLD DATE		LGL DATE	
XF DATE		LAND DATE	
INC DATE		AG DATE	

VALUATION SUMMARY

VALUATION BY		STANDARD
Tax Group: 4	Tax Dist:	
BUILDING MARKET VALUE		304,244
TOTAL MARKET OB/XF VALUE		6,801
TOTAL LAND VALUE - MARKET		55,000
TOTAL MARKET VALUE		366,045
SOH/AGL Deduction		2,969
ASSESSED VALUE		363,076
TOTAL EXEMPTION VALUE	HX HB	50,000
BASE TAXABLE VALUE		313,076
TOTAL JUST VALUE		366,045
NCON VALUE		0
INCOME VALUE		
PREVIOUS YEAR MKT VALUE		352,501

PERMIT NUM	DESCRIPTION	AMT	ISSUED
20009747	REPAIR/RRF	12,990	10/15/2020
B13828	NEW CONSTR	0	12/01/2004
E0413956	ELEC OTHER	2,000	12/01/2004

SALES DATA

OFF RECORD Number	DATE	TYPE INST	Q / U	V / I	RSN CD	SALE PRICE
2605/0327	11/22/2022	WD	Q	I	01	413,000
GRANTOR: CHAPLIN GEORGE O & SH						
GRANTEE: WISDOM NATHAN A & L						
1330/1493	7/06/2005	WD	Q	I		303,000
GRANTOR: KB HOME JACKSONVILLE						
GRANTEE: CHAPLIN GEORGE O &						

BUILDING NOTES

BUILDING DIMENSIONS

BAS=[YR=2005] W32 FOP=[YR=2005] W12 S6 E12 N6$ S6 W12 S25
FGR=[YR=2005] W10 S21 E10 S2 E21 N9 FOP=[YR=2005] E12 N4 W12
S4$ N13 W2 S1 W19 N2$ S2 E19 N1 E2 S9 E23 N41$ PTR=N20
FUS=[YR=2005] N41 W32 S6 W12 S35 E44 $ S20 $.

EXTRA FEATURES

LN	OB/XF CODE	DESCRIPTION	BLD	CAP	L	W	UNITS	UT	Adj R	ADJ UNIT PRICE	ORIG COND	YEAR ON	YEAR ACTUAL	Q	% COND	OB/XF MKT VALUE	NOTES
1	0811	CONCRETE B	0	100	0	0	671.00	SF	5.20	5.20	100	2005	2005	3	86	3,001	
2	0855	CONC PAVER	1	100	0	0	400.00	SF	10.00	10.00	100	2023	2015		95	3,800	

LAND DESCRIPTION

TOTAL OB/XF 6,801

LN	USE CODE	CLS	LAND USE DESCRIPTION	CAP	RD	LOC ZONE	FRONT	DEPTH	TOT LND UTS	UNIT TYPE	DT	DPTH FACT	% COND	TOT ADJ	UNIT PRICE	ADJ UNIT PRICE	LAND VALUE	OTHER ADJUSTMENTS AND NOTES	YEAR	DENSITY	DECL	FRZ	YR	CONSRV
1	000100	C	SFR	100	0003	PUD	0.00	0.00	1.00	LT		1.00	1.00	1.00	55,000.00	55,000.00	55,000							

REVIEW DATE 01/06/2023 BY KWA Total Acres: 0.00 Total Land Value: 55,000 Market: 0 Agricultural: 0 Common: 55,000 PRINTED 08/06/2024 BY SYS