LOT 95
RIVER GLEN #1 PB 7/263

SCHREINER PAUL DENNIS & ANDREA CRISTA
75215 FERN CREEK DRIVE
YULEE, FL 32097

2024

11-2N-26-1830-0095-0000

NASSAU COUNTY PROPERTY

BUILDING CHARACTERISTICS

ELEMENT	CD	CONSTRUCTION
Exterior Wall	16	WD FR STUC 50
Exterior Wall	17	CB STUCCO 50
Roof Structur	03	GABLE/HIP 100
Roof Cover	03	COMP SHNGL 100
Interior Wall	05	DRYWALL 100
Interior Floo	14	CARPET 70
Interior Floo	08	SHT VINYL 30
Air Condition	03	CENTRAL 100
Heating Type	04	AIR DUCTED 100
Bedrooms		4 100
Bathrooms		2.5 100
Frame	02	WOOD FRAME 100
Stories	2.	2. 100
Units		0 100
Occupancy	00	NONE 100
Quality	03	Quality Level 03
DOR CODE	0100	SINGLE FAMILY
MAP NUM		MKT AREA 05
NEIGHBORHOOD/LOC	5009.00	

AREA TYPE	TOTAL GROSS AREA	PCT OF BASE	TOT ADJ AREA	SUBAREA MARKET VALUE
BAS	1,240	100	1,240	106,336
FGR	624	55	343	29,414
FOP	24	30	7	600
FSP	280	40	112	9,605
FUS	1,658	100	1,658	142,182
PTO	32	5	2	171
TOTALS	3,858		3,362	288,309

MARKET ADJUSTMENTS

TYPE	MDL	EFF. AREA	TOT ADJ PTS	EFF. BASE RATE	REPL. COST NEW	AYB	EYB	ECON	FNCT		NORM	% COND
0100	01	3,362	97.0600	92.21	310,010	2009	2009	0	0	0	7.00	93.00

1 SINGLE FAM – 100% - 2024 Heated Area: 2898 HX Base Yr 2024

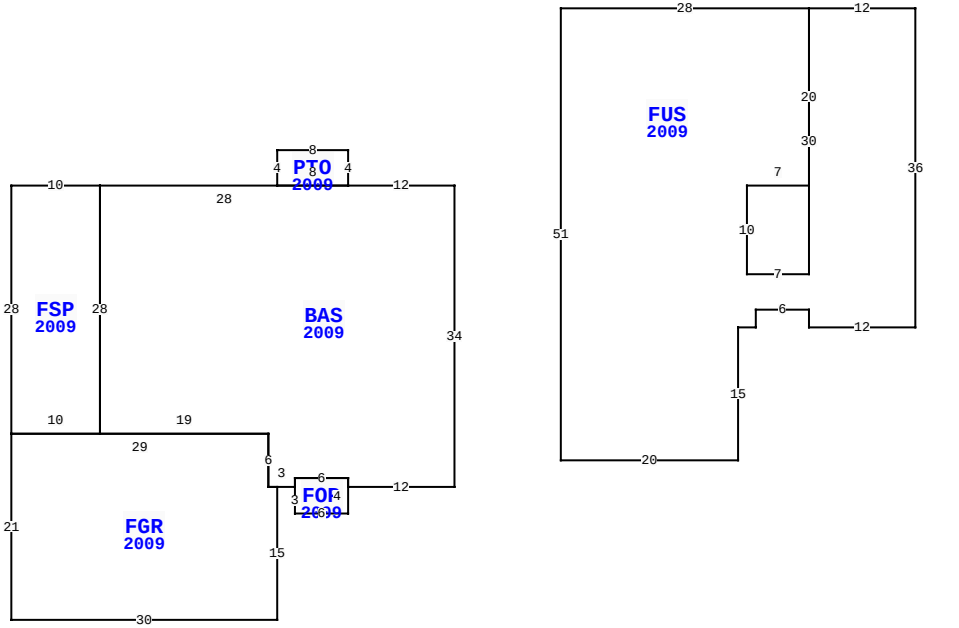

BLD DATE	12/02/2009	KK	LGL DATE
XF DATE	12/02/2009	KK	LAND DATE
INC DATE			AG DATE

75215 FERN CREEK DR, YULEE

VALUATION SUMMARY

VALUATION BY		STANDARD
Tax Group: 4	Tax Dist:	
BUILDING MARKET VALUE		288,309
TOTAL MARKET OB/XF VALUE		4,777
TOTAL LAND VALUE - MARKET		55,000
TOTAL MARKET VALUE		348,086
SOH/AGL Deduction		0
ASSESSED VALUE		348,086
TOTAL EXEMPTION VALUE	HX HB	50,000
BASE TAXABLE VALUE		298,086
TOTAL JUST VALUE		348,086
NCON VALUE		0
INCOME VALUE		
PREVIOUS YEAR MKT VALUE		335,198

PERMIT NUM	DESCRIPTION	AMT	ISSUED
C0922554	CO ISSUED	0	06/01/2009
B22554	NEW CONSTR	246,708	06/01/2009
M14599	MECH OTHER	0	06/01/2009
P13801	OTHER	0	06/01/2009
R11915	REPAIR/RRF	2,200	06/01/2009

SALES DATA

OFF RECORD Number	DATE	TYPE INST	Q U	V I	RSN CD	SALE PRICE
2564/0510	5/16/2022	WD	Q	I	01	427,500
GRANTOR: KISSAM CHARLIE B & GE						
GRANTEE: SCHREINER PAUL DENN						
2031/1524	1/26/2016	SW	U	I	18	180,000
GRANTOR: SECRETARY OF VETERANS						
GRANTEE: KISSAM CHARLIE N &						

BUILDING NOTES

BUILDING DIMENSIONS

BAS=[YR=2009] W12 PTO=[YR=2009] N4 W8 S4 E8$ W28 FSP=[YR=2009] W10 S28 FGR=[YR=2009] S21 E30 N15 W1 N6 W29 $ E10 N28$ S28 E19 S6 E3 FOP=[YR=2009] S3 E6 N4 W6 S1$ N1 E6 S1 E12 N34$ PTR=E40 FUS=[YR=2009] N20 W28 S51 E20 N15 E2 N2 E6 S2 E12 N36 W12 S30 W7 N10 E7$ W40$.

EXTRA FEATURES

L N	OB/XF CODE	DESCRIPTION	BLD	CAP	L	W	UNITS	UT	Adj R	ADJ UNIT PRICE	ORIG COND	YEAR ON	YEAR ACTUAL	Q	% COND	OB/XF MKT VALUE	NOTES
1	0812	CONCRETE C	0	100	0	0	1,210.00	SF	4.00	4.00	100	2009	2009	3	90	4,356	
2	0810	CONCRETE A	0	100	24	3	72.00	SF	6.50	6.50	100	2009	2009	3	90	421	

LAND DESCRIPTION

TOTAL OB/XF 4,777

L N	USE CODE	CLS	LAND USE DESCRIPTION	CAP	R D	LOC ZONE	FRONT	DEPTH	TOT LND UTS	UNIT TYPE	D T	DPTH FACT	% COND	TOT ADJ	UNIT PRICE	ADJ UNIT PRICE	LAND VALUE	OTHER ADJUSTMENTS AND NOTES	YEAR	DENSITY	DECL	FRZ	YR	CONSRV
1	000133	C	SFR LAKE	100		PUD	0.00	0.00	1.00	UT		1.00	1.00	1.00	55,000.00	55,000.00	55,000							

REVIEW DATE 01/31/2024 BY KBA Total Acres: 0.00 Total Land Value: 55,000 Market: 0 Agricultural: 0 Common: 55,000 PRINTED 08/06/2024 BY SYS