PT OF SE1/4 OF NE1/4
SEC 10-3N-23E IN OR 2704/39

HALL BENJAMIN DAVIS & LEANN MARIE
17107 TAZ DRIVE
HILLIARD, FL 32046

2024

10-3N-23-0000-0003-0040

BUILDING CHARACTERISTICS

ELEMENT	CD	CONSTRUCTION
Exterior Wall	05	AVERAGE 100
Roof Structur	03	GABLE/HIP 100
Roof Cover	12	MODULAR MT 100
Interior Wall	05	DRYWALL 100
Interior Floo	14	CARPET 90
Interior Floo	11	CLAY TILE 10
Air Condition	03	CENTRAL 100
Heating Type	04	AIR DUCTED 100
Bedrooms		2 100
Bathrooms		1.5 100
Frame	02	WOOD FRAME 100
Stories	2.	2. 100
Units		0 100
Occupancy	00	NONE 100
Quality	02	Quality Level 02
DOR CODE	0100	SINGLE FAMILY
MAP NUM		MKT AREA 09
NEIGHBORHOOD/LOC	9001.00	

AREA TYPE	TOTAL GROSS AREA	PCT OF BASE	TOT ADJ AREA	SUBAREA MARKET VALUE
BAL	320	15	48	3,828
BAS	576	100	576	45,937
FST	128	55	70	5,583
FUS	1,636	100	1,636	130,473
PTO	128	5	6	478
UCP	1,024	20	205	16,349
UOP	228	20	46	3,669
TOTALS	4,040		2,587	206,317

MARKET ADJUSTMENTS

TYPE	MDL	EFF. AREA	TOT ADJ PTS	EFF. BASE RATE	REPL. COST NEW	AYB	EYB	ECON	FNCT		NORM	% COND
0100	01	2,587	95.1216	90.37	233,787	1999	1999	0	0	0	11.75	88.25

2 SINGLE FAM – 100% - 2023 Heated Area: 2212 HX Base Yr 2023

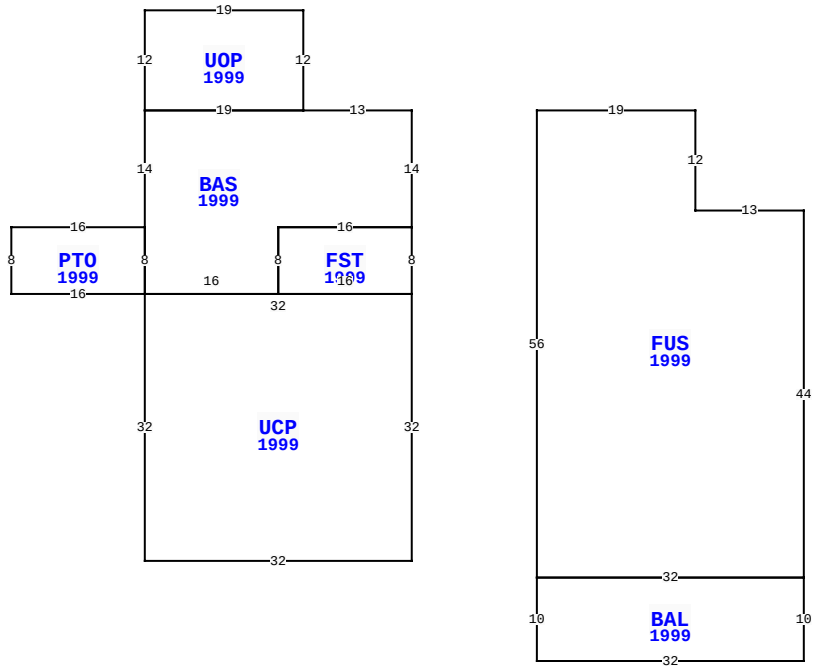

17107 TAZ DR, HILLIARD

BLD DATE		LGL DATE	
XF DATE		LAND DATE	06/13/2023 MLU
INC DATE		AG DATE	

NASSAU COUNTY PROPERTY

PAGE 1 of 1 4

VALUATION SUMMARY

VALUATION BY		STANDARD
Tax Group: 4	Tax Dist:	
BUILDING MARKET VALUE		206,317
TOTAL MARKET OB/XF VALUE		6,955
TOTAL LAND VALUE - MARKET		35,910
TOTAL MARKET VALUE		249,182
SOH/AGL Deduction		27,075
ASSESSED VALUE		222,107
TOTAL EXEMPTION VALUE	HX HB	50,000
BASE TAXABLE VALUE		172,107
TOTAL JUST VALUE		249,182
NCON VALUE		0
INCOME VALUE		
PREVIOUS YEAR MKT VALUE		240,276

PERMIT NUM	DESCRIPTION	AMT	ISSUED
E984903	NEW CONSTR	0	06/01/1998
B9602808	NEW CONSTR	75,655	01/01/1996
B951888	XFOB	14,688	05/01/1995

SALES DATA

OFF RECORD Number	DATE	TYPE INST	Q / U	V / I	RSN CD	SALE PRICE
2704/39	3/22/2024	WD	Q	I	01	330,000
GRANTOR: CANTERBURY MIKEL & JE						
GRANTEE: HALL BENJAMIN DAVIS						
2550/1007	3/18/2022	WD	Q	I	01	285,000
GRANTOR: HENDRICKSON DEREK GIL						
GRANTEE: CANTERBURY MIKEL &						

BUILDING NOTES

EXTRA FEATURES

LN	OB/XF CODE	DESCRIPTION	BLD	CAP	L	W	UNITS	UT	Adj R	ADJ UNIT PRICE	ORIG COND	YEAR ON	YEAR ACTUAL	Q	% COND	OB/XF MKT VALUE	NOTES
1	0510	GARAGE WD-	0	100	24	36	864.00	SF	35.00	35.00	100	1995	1995	3	23	6,955	

BUILDING DIMENSIONS

BAS=[YR=1999] W13 UOP=[YR=1999] N12 W19 S12 E19 $ W19 S14
PTO=[YR=1999] W16 S8 E16 UCP=[YR=1999] S32 E32 N32
FST=[YR=1999] N8 W16 S8 E16 $ W32 $ N8 $ S8 E16 N8 E16 N14 $
PTR= E15 FUS=[YR=1999] E19 S12 E13 S44 BAL=[YR=1999] S10 W32
N10 E32$ W32 N56 $ W15 $.

LAND DESCRIPTION

TOTAL OB/XF 6,955

LN	USE CODE	CLS	LAND USE DESCRIPTION	CAP	RD	LOC ZONE	FRONT	DEPTH	TOT LND UTS	UNIT TYPE	DT	DPTH FACT	% COND	TOT ADJ	UNIT PRICE	ADJ UNIT PRICE	LAND VALUE	OTHER ADJUSTMENTS AND NOTES	YEAR	DENSITY	DECL	FRZ	YR	CONSRV
1	000115	C	SFR ACRES	100	0006	OR	0.00	0.00	1.71	AC		1.00	1.00	0.70	30,000.00	21,000.00	35,910							

REVIEW DATE 04/04/2022 BY TWA Total Acres: 1.71 Total Land Value: 35,910 Market: 0 Agricultural: 0 Common: 35,910 PRINTED 08/06/2024 BY SYS