IN OR 419 PG 89

FERBER GEORGE A & JO ANN
4058 S FLETCHER AV
FERNANDINA BEACH, FL 32034

2024

10-2N-28-0000-0035-0000

BUILDING CHARACTERISTICS

ELEMENT	CD	CONSTRUCTION
Exterior Wall	16	WD FR STUC 100
Roof Structur	08	IRREGULAR 100
Roof Cover	08	CLAY TILE 100
Interior Wall	05	DRYWALL 100
Interior Floo	11	CLAY TILE 80
Interior Floo	19	MARBLE 20
Air Condition	03	CENTRAL 100
Heating Type	04	AIR DUCTED 100
Bedrooms		3 100
Bathrooms		3 100
Frame	02	WOOD FRAME 100
Stories	2.	2. 100
Units		0 100
BUD8 Adjustme	02	DIST FB 100
Occupancy	00	NONE 100
Quality	04	Quality Level 04
DOR CODE	0100	SINGLE FAMILY
MAP NUM		MKT AREA 01
NEIGHBORHOOD/LOC	1053.00	

AREA TYPE	TOTAL GROSS AREA	PCT OF BASE	TOT ADJ AREA	SUBAREA MARKET VALUE
BAS	1,036	100	1,036	180,943
FCP	156	25	39	6,812
FCP	156	25	39	6,812
FCP	91	25	23	4,017
FCP	91	25	23	4,017
FGR	286	55	157	27,421
FGR	286	55	157	27,421
FOP	76	30	23	4,017
FST	36	55	20	3,493
FUS	1,610	100	1,610	281,195
TOTALS	4,861		3,334	582,299

MARKET ADJUSTMENTS

TYPE	MDL	EFF. AREA	TOT ADJ PTS	EFF. BASE RATE	REPL. COST NEW	AYB	EYB	ECON	FNCT		NORM	% COND
0500	01	3,334	131.5692	197.35	657,965	1954	2000	0	0	0	11.50	88.50

1 SFR CUST – 100% - 0 Heated Area: 2646 HX Base Yr

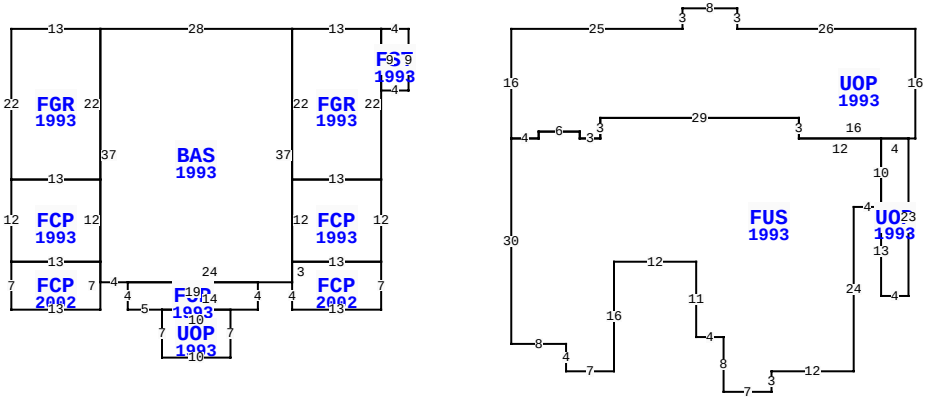

** This building has 13 Sub-Areas

4058 S FLETCHER AVE, FERNANDINA BEACH

BLD DATE		LGL DATE	
XF DATE		LAND DATE	
INC DATE		AG DATE	

NASSAU COUNTY PROPERTY

PAGE 1 of 1 2

VALUATION SUMMARY

VALUATION BY		STANDARD
Tax Group: 2	Tax Dist:	
BUILDING MARKET VALUE		582,299
TOTAL MARKET OB/XF VALUE		14,580
TOTAL LAND VALUE - MARKET		1,237,500
TOTAL MARKET VALUE		1,834,379
SOH/AGL Deduction		1,381,451
ASSESSED VALUE		452,928
TOTAL EXEMPTION VALUE	HX HB	50,000
BASE TAXABLE VALUE		402,928
TOTAL JUST VALUE		1,834,379
NCON VALUE		0
INCOME VALUE		
PREVIOUS YEAR MKT VALUE		1,809,046

PERMIT NUM	DESCRIPTION	AMT	ISSUED
20071686	REPAIR/RRF	1,000	09/06/2007
B002330	ADDITION	3,300	03/01/2000

SALES DATA

OFF RECORD Number	DATE	TYPE INST	Q U	V I	RSN CD	SALE PRICE
0419/0089	4/01/1984	WD	Q	I		155,500
GRANTOR:						
GRANTEE:						
0092/0216	1/01/1969	TA	U	I		30,000
GRANTOR:						
GRANTEE:						

BUILDING NOTES

BUILDING DIMENSIONS

FST=[YR=1993] W4 FGR=[YR=1993] W13 BAS=[YR=1993] W28 FGR=[YR=1993] W13 S22 FCP=[YR=1993] S12 FCP=[YR=2002] S7 E13 N7 W13 $ E13 N12 W13 $ E13 N22 $ S37 E4 FOP=[YR=1993] S4 E5 UOP=[YR=1993] S7 E10 N7 W10 $ E14 N4 W19 $ E24 FCP=[YR=2002] S4 E13 N7 FCP=[YR=1993] N12 W13 S12 E13 $ W13 S3 $ N37 $ S22 E13 N22 $ S9 E4 N9 $ PTR= E15 UOP=[YR=1993] E25 N3 E8 S3 E26 S16 W1 UOP=[YR=1993] S23 W4 N13 FUS=[YR=1993] W4 S24 W12 S3 W7 N8 W4 N11 W12 S16 W7 N4 W8 N30 E4 N1 E6 S1 E3 N3 E29 S3 E12 S10 $ N10 E4 $ W16 N3 W29 S3 W3 N1 W6 S1 W4 N16 $ W15 $.

EXTRA FEATURES

LN	OB/XF CODE	DESCRIPTION	BLD	CAP	L	W	UNITS	UT	Adj R	ADJ UNIT PRICE	ORIG COND	YEAR ON	YEAR ACTUAL	Q	% COND	OB/XF MKT VALUE	NOTES
1	1124	CB/STC 4"	0	100	0	0	1,637.00	SF	6.50	6.50	100	1986	1986	3	49.5	5,267	
2	0825	BRICK	0	100	0	0	112.00	SF	12.50	12.50	100	1986	1986	3	82	1,148	
3	0812	CONCRETE C	0	100	0	0	3,139.00	SF	4.00	4.00	100	1986	1986	3	49.5	6,215	
4	1242	WD DECK A	0	100	0	0	375.00	SF	10.00	10.00	100	1986	1986	3	20	750	
5	0504	FP-ELECTRI	0	100	0	0	1.00	UT	2,000.00	2,000.00	100	1986	1986	3	60	1,200	

LAND DESCRIPTION

TOTAL OB/XF 14,580

LN	USE CODE	CLS	LAND USE DESCRIPTION	CAP	RD	LOC ZONE	FRONT	DEPTH	TOT LND UTS	UNIT TYPE	DT	DPTH FACT	% COND	TOT ADJ	UNIT PRICE	ADJ UNIT PRICE	LAND VALUE	OTHER ADJUSTMENTS AND NOTES	YEAR	DENSITY	DECL	FRZ	YR	CONSRV
1	000120	C	SFR OCN FT	100		R-1	75.00	400.00	75.00	FF		1.00	1.00	1.00	16,500.00	16,500.00	1,237,500							

REVIEW DATE 03/20/2020 BY KWA Total Acres: 0.00 Total Land Value: 1,237,500 Market: 0 Agricultural: 0 Common: 1,237,500 PRINTED 08/06/2024 BY SYS