IN OR 933/1919 & OR 1071/214

JACKSON KEEFE NEELY/JACKSON MARGARET E EVE ET AL
C/O MARGARET LEMASTER, 220 W ADAMS ST
FAYETTEVILLE, AR 72701

2024

10-2N-28-0000-0028-0000

BUILDING CHARACTERISTICS

ELEMENT	CD	CONSTRUCTION
Exterior Wall	05	AVERAGE 60
Exterior Wall	15	CONC BLOCK 40
Roof Structur	01	FLAT 100
Roof Cover	04	BUILT-UP 100
Interior Wall	06	CUST PANEL 90
Interior Wall	05	DRYWALL 10
Interior Floo	12	HARDWOOD 80
Interior Floo	08	SHT VINYL 20
Air Condition	03	CENTRAL 100
Heating Type	04	AIR DUCTED 100
Bedrooms		3 100
Bathrooms		2 100
Frame	02	WOOD FRAME 100
Stories	1.	1. 100
Units		0 100
BUD8 Adjustme	02	DIST FB 100
Occupancy	00	NONE 100
Quality	04	Quality Level 04
DOR CODE	0100	SINGLE FAMILY
MAP NUM		MKT AREA 01
NEIGHBORHOOD/LOC	1053.00	

AREA TYPE	TOTAL GROSS AREA	PCT OF BASE	TOT ADJ AREA	SUBAREA MARKET VALUE
BAS	1,633	100	1,633	173,467
FOP	85	30	26	2,762
UGR	360	45	162	17,209
UOP	304	20	61	6,480
UST	578	45	260	27,619
TOTALS	2,960		2,142	227,536

MARKET ADJUSTMENTS

TYPE	MDL	EFF. AREA	TOT ADJ PTS	EFF. BASE RATE	REPL. COST NEW	AYB	EYB	ECON	FNCT		NORM	% COND
0900	01	2,142	118.4379	148.05	317,123	1957	1957	0	0	0	28.25	71.75

1 SNGL FAM – 0% - 0 Heated Area: 1633 HX Base Yr

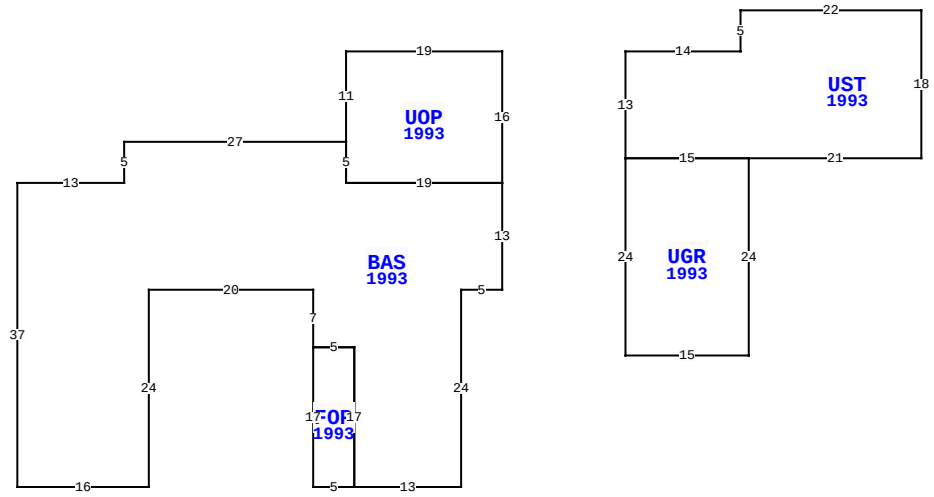

BLD DATE	09/03/2009 KK	LGL DATE	
XF DATE		LAND DATE	
INC DATE		AG DATE	

4124 S FLETCHER AVE, FERNANDINA BEACH

NASSAU COUNTY PROPERTY

PAGE 1 of 1 2

VALUATION SUMMARY

VALUATION BY	STANDARD
Tax Group: 2	Tax Dist:
BUILDING MARKET VALUE	227,536
TOTAL MARKET OB/XF VALUE	7,157
TOTAL LAND VALUE - MARKET	1,237,500
TOTAL MARKET VALUE	1,472,193
SOH/AGL Deduction	0
ASSESSED VALUE	1,472,193
TOTAL EXEMPTION VALUE	0
BASE TAXABLE VALUE	1,472,193
TOTAL JUST VALUE	1,472,193
NCON VALUE	0
INCOME VALUE	
PREVIOUS YEAR MKT VALUE	1,461,683

PERMIT NUM	DESCRIPTION	AMT	ISSUED
20051616	REPAIR/RRF	2,000	04/18/2005
B95931	REPAIR/RRF	5,500	09/21/1995
6717	XFOB	2,500	09/03/1991
6320	REPAIR/RRF	2,000	01/08/1991

SALES DATA

OFF RECORD Number	DATE	TYPE INST	Q U	V I	RSN CD	SALE PRICE
1071/0214	7/25/2002	WD	U	I	06	375,400
GRANTOR: NEELY F L JR & L GAR						
GRANTEE: FROGMORE ASSOCIATES						
0933/1919	5/26/2000	PR	U	I	06	100
GRANTOR: GRAY SUSAN P/R						
GRANTEE: JACKSON KEEFE & MAR						

BUILDING NOTES

BUILDING DIMENSIONS

UOP=[YR=1993] W19 S11 BAS=[YR=1993] W27 S5 W13 S37E16 N24 E20 S7 FOP=[YR=1993] S17 E5 N17 W5$ E5 S17 E13 N24 E5 N13 W19 N5$ S5 E19 N16$ PTR= E15 UST=[YR=1993] E14 N5 E22 S18 W21 UGR=[YR=1993] S24 W15 N24 E15$ W15 N13$ W15$.

EXTRA FEATURES

LN	OB/XF CODE	DESCRIPTION	BLD	CAP	L	W	UNITS	UT	Adj R	ADJ UNIT PRICE	ORIG COND	YEAR ON	YEAR ACTUAL	Q	% COND	OB/XF MKT VALUE	NOTES
1	0500	FP-PRE FAB	0	0	0	0	1.00	UT	3,500.00	3,500.00	100	1957	1957	3	20	700	
2	1242	WD DECK A	0	0	0	0	408.00	SF	10.00	10.00	100	1984	1984	3	20	816	
3	0825	BRICK	0	0	0	0	823.00	SF	6.25	6.25	100	1980	1980	3	73.5	3,781	
4	1242	WD DECK A	0	0	40	10	400.00	SF	10.00	10.00	100	1991	1991	3	20	800	
5	1242	WD DECK A	0	0	20	4	80.00	SF	10.00	10.00	100	1991	1991	3	20	160	
6	1242	WD DECK A	0	0	14	4	56.00	SF	10.00	10.00	100	1991	1991	3	20	112	
7	0810	CONCRETE A	0	0	0	0	392.00	SF	6.50	6.50	100	1970	1970	3	21	535	
8	0825	BRICK	0	0	9	3	27.00	SF	12.50	12.50	100	1970	1970	3	56	189	
9	1242	WD DECK A	0	0	8	4	32.00	SF	10.00	10.00	100	2000	2000	3	20	64	

LAND DESCRIPTION

TOTAL OB/XF 7,157

LN	USE CODE	CLS	LAND USE DESCRIPTION	CAP	RD	LOC ZONE	FRONT	DEPTH	TOT LND UTS	UNIT TYPE	DT	DPTH FACT	% COND	TOT ADJ	UNIT PRICE	ADJ UNIT PRICE	LAND VALUE	OTHER ADJUSTMENTS AND NOTES	YEAR	DENSITY	DECL	FRZ	YR	CONSRV
1	000120	C	SFR OCN FT	0		R-1	75.00	400.00	75.00	FF		1.00	1.00	1.00	16,500.00	16,500.00	1,237,500							

REVIEW DATE 12/19/2019 BY KBA Total Acres: 0.00 Total Land Value: 1,237,500 Market: 0 Agricultural: 0 Common: 1,237,500 PRINTED 08/06/2024 BY SYS