PT FRACL SEC 10-2N-28E IN
IN OR 2209/795

POYNTER BRYAN M
4110 DUNEWOOD PLACE
FERNANDINA BEACH, FL 32034

2024

10-2N-28-0000-0008-0020

BUILDING CHARACTERISTICS

ELEMENT	CD	CONSTRUCTION
Exterior Wall	10	ABOVE AVG 50
Exterior Wall	17	CB STUCCO 50
Roof Structur	02	SHED 100
Roof Cover	04	BUILT-UP 100
Interior Wall	05	DRYWALL 100
Interior Floo	12	HARDWOOD 100
Air Condition	03	CENTRAL 100
Heating Type	04	AIR DUCTED 100
Bedrooms		3 100
Bathrooms		2.5 100
Frame	03	MASONRY 100
Stories	2.	2. 100
Units		0 100
Quality	04	Quality Level 04

DOR CODE 0100 SINGLE FAMILY
MAP NUM | MKT AREA 01
NEIGHBORHOOD/LOC 2030.00

AREA TYPE	TOTAL GROSS AREA	PCT OF BASE	TOT ADJ AREA	SUBAREA MARKET VALUE
BAS	361	100	361	71,394
FCP	1,637	25	409	80,887
FOP	55	30	16	3,165
FSP	408	40	163	32,236
FST	80	55	44	8,702
FUS	2,027	100	2,027	400,875
STR	65	10	6	1,187
TOTALS	4,633		3,026	598,445

MARKET ADJUSTMENTS

TYPE	MDL	EFF. AREA	TOT ADJ PTS	EFF. BASE RATE	REPL. COST NEW	AYB	EYB	ECON	FNCT		NORM	% COND
0500	11	3,026	134.1912	201.29	609,104	2019	2019	0	0	0	1.75	98.25

1 SFR CUST – 100% - 2022 Heated Area: 2388 HX Base Yr 2022

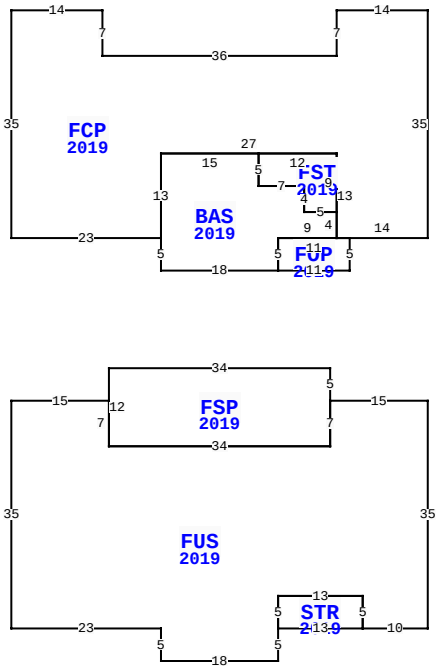

4110 DUNEWOOD PL, FERNANDINA BEACH

BLD DATE		LGL DATE	
XF DATE		LAND DATE	
INC DATE		AG DATE	

NASSAU COUNTY PROPERTY

PAGE 1 of 1 2

VALUATION SUMMARY

VALUATION BY		STANDARD
Tax Group: 2	Tax Dist:	
BUILDING MARKET VALUE		598,445
TOTAL MARKET OB/XF VALUE		0
TOTAL LAND VALUE - MARKET		437,500
TOTAL MARKET VALUE		1,035,945
SOH/AGL Deduction		10,443
ASSESSED VALUE		1,025,502
TOTAL EXEMPTION VALUE	HX HB	50,000
BASE TAXABLE VALUE		975,502
TOTAL JUST VALUE		1,035,945
NCON VALUE		0
INCOME VALUE		
PREVIOUS YEAR MKT VALUE		1,008,899

PERMIT NUM	DESCRIPTION	AMT	ISSUED
20182880	CO ISSUED	0	12/26/2019
20182880	NEW CONSTR	388,137	08/21/2018

SALES DATA

OFF RECORD Number	DATE	TYPE INST	Q / U	V / I	RSN CD	SALE PRICE
2209/0795	7/02/2018	WD	U	V	30	100,000
GRANTOR: KARIBO NORMA S REVOCA						
GRANTEE: POYNTER BRYAN M						
2175/1201	1/31/2018	QC	U	I	11	100
GRANTOR: NORMA S KARIBO REVOCA						
GRANTEE: NORMA KARIBO REV TR						

BUILDING NOTES

BUILDING DIMENSIONS

FCP=[YR=2019] W14 S7 W36 N7 W14 S35 E23 BAS=[YR=2019] S5 E18 FOP=[YR=2019] E11 N5 W11 S5$ N5 E9 N4 FST=[YR=2019] N9 W12 S5 E7 S4 E5$ W5 N4 W7 N5 W15 S13$ N13 E27 S13 E14 N35$ PTR=S60 FUS=[YR=2019] W15 FSP=[YR=2019] N5 W34 S12 E34 N7$ S7 W34 N7 W15 S35 E23 S5 E18 N5 STR=[YR=2019] E13 N5 W13 S5$ N5 E13 S5 E10 N35$ N60$.

EXTRA FEATURES

L N	OB/XF CODE	DESCRIPTION	BLD	CAP	L	W	UNITS	UT	Adj R	ADJ UNIT PRICE	ORIG COND	YEAR ON	YEAR ACTUAL	Q	% COND	OB/XF MKT VALUE	NOTES

LAND DESCRIPTION

TOTAL OB/XF 0

L N	USE CODE	CLS	LAND USE DESCRIPTION	CAP	R D	LOC ZONE	FRONT	DEPTH	TOT LND UTS	UNIT TYPE	D T	DPTH FACT	% COND	TOT ADJ	UNIT PRICE	ADJ UNIT PRICE	LAND VALUE	OTHER ADJUSTMENTS AND NOTES	YEAR	DENSITY	DECL	FRZ	YR	CONSRV
1	000000	C	VAC RES	100		R-1	160.00	148.00	1.00	LT		1.00	1.00	1.25	350,000.00	437,500.00	437,500							

REVIEW DATE 01/09/2020 BY DJ Total Acres: 0.00 Total Land Value: 437,500 Market: 0 Agricultural: 0 Common: 437,500 PRINTED 08/06/2024 BY SYS