LOT 213
TRIBUTARY PHASE 1A UNIT 2
OR 2434/703

JANES CHRISTOPHER F & TRACY JEAN KLEIN
75229 WHITE RABBIT AVE
YULEE, FL 32097

2024

10-2N-26-2010-0213-0000

BUILDING CHARACTERISTICS

ELEMENT	CD	CONSTRUCTION
Exterior Wall	31	HARDIE BRD 100
Roof Structur	08	IRREGULAR 100
Roof Cover	03	COMP SHNGL 100
Interior Wall	05	DRYWALL 100
Interior Floo	13	LVT/LAMNT 50
Interior Floo	14	CARPET 50
Air Condition	03	CENTRAL 100
Heating Type	04	AIR DUCTED 100
Bedrooms		5 100
Bathrooms		4 100
Frame	02	WOOD FRAME 100
Stories	1.5	1.5 100
Units		0 100
Occupancy	00	NONE 100
Quality	03	Quality Level 03
DOR CODE	0100	SINGLE FAMILY
MAP NUM		MKT AREA 05
NEIGHBORHOOD/LOC	5020.00	

AREA TYPE	TOTAL GROSS AREA	PCT OF BASE	TOT ADJ AREA	SUBAREA MARKET VALUE
BAS	2,300	100	2,300	229,172
FGR	399	55	219	21,821
FOP	50	30	15	1,495
FOP	128	30	38	3,786
FUS	474	100	474	47,229
PTO	260	5	13	1,295
STR	52	10	5	498
TOTALS	3,663		3,064	305,297

MARKET ADJUSTMENTS

TYPE	MDL	EFF. AREA	TOT ADJ PTS	EFF. BASE RATE	REPL. COST NEW	AYB	EYB	ECON	FNCT		NORM	% COND
0100	01	3,064	104.8800	99.64	305,297	2022	2022	0	0	0	0.00	100.00

1 SINGLE FAM – 100% - 2023 Heated Area: 2774 HX Base Yr 2023

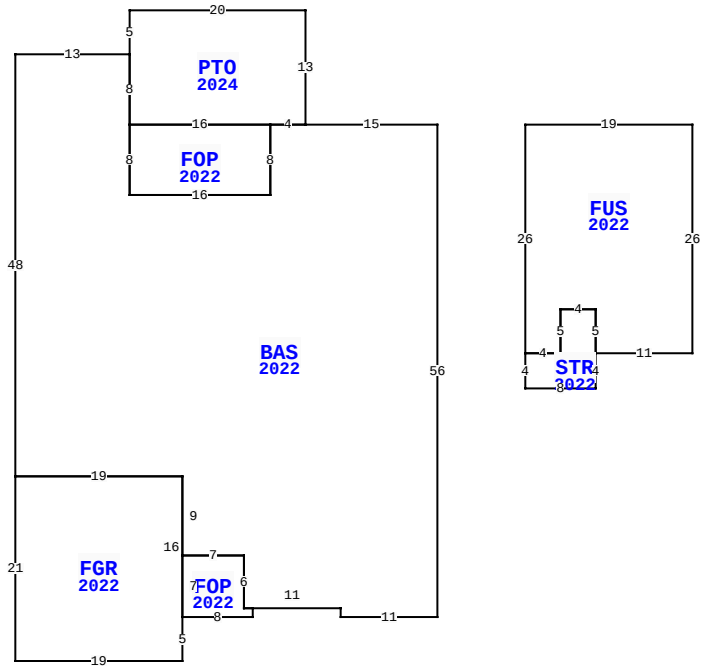

75229 WHITE RABBIT AVE, YULEE

BLD DATE		LGL DATE	
XF DATE		LAND DATE	
INC DATE		AG DATE	

NASSAU COUNTY PROPERTY

PAGE 1 of 1 4

VALUATION SUMMARY

VALUATION BY		STANDARD
Tax Group: 4	Tax Dist:	
BUILDING MARKET VALUE		305,297
TOTAL MARKET OB/XF VALUE		17,914
TOTAL LAND VALUE - MARKET		65,000
TOTAL MARKET VALUE		388,211
SOH/AGL Deduction		4,516
ASSESSED VALUE		383,695
TOTAL EXEMPTION VALUE	HX HB	50,000
BASE TAXABLE VALUE		333,695
TOTAL JUST VALUE		388,211
NCON VALUE		16,054
INCOME VALUE		
PREVIOUS YEAR MKT VALUE		356,933

PERMIT NUM	DESCRIPTION	AMT	ISSUED
B2301619	XFOB	8,642	02/05/2023
22008296	CO ISSUED	0	05/27/2022
21008768	NEW CONSTR	388,749	09/01/2021

SALES DATA

OFF RECORD Number	DATE	TYPE INST	Q U	V I	RSN CD	SALE PRICE
2566/1603	5/26/2022	WD	Q	I	01	525,000
GRANTOR: DREAM FINDERS HOMES L						
GRANTEE: JANES CHRISTOPHER F						
2462/1994	5/19/2021	SW	Q	V	05	1,008,400
GRANTOR: THREE RIVERS DEVELOPE						
GRANTEE: DREAM FINDERS HOMES						

BUILDING NOTES

BUILDING DIMENSIONS

BAS=[YR=2022;ORIG=0,0] W15 W4 S8 W16 N8 N8 W13 S48 E19 S9 E7 S6 E11 S1 E11 N56 $
FUS2022=[ORIG=10,0] E19 S26 W11 N5 W4 S5 W4 N26 $
FGR=[YR=2022;ORIG=-48,40] S21 E19 N5 N16 W19 $
FOP=[YR=2022;ORIG=-19,0] W16 S8 E16 N8 $
STR=[YR=2022;ORIG=18,26] S4 W8 N4 E4 N5 E4 S5 $
FOP=[YR=2022;ORIG=-29,56] E8 N1 W1 N6 W7 S7 $
PTR=[ORIG=0,0] E10 W10 $
PTO=[YR=2024;ORIG=-35,-13] S5 S8 E16 E4 N13 W20 $
.

EXTRA FEATURES

LN	OB/XF CODE	DESCRIPTION	BLD	CAP	L	W	UNITS	UT	Adj R	ADJ UNIT PRICE	ORIG COND	YEAR ON	YEAR ACTUAL	Q	% COND	OB/XF MKT VALUE	NOTES
1	0811	CONCRETE B	0	100	0	0	607.00	SF	5.20	5.20	100	2022	2022	3	100	3,156	
2	0911	SCRN RM A	0	100	13	20	260.00	SF	17.50	17.50	100	2024	2023		100	4,550	
3	0857	SANDSTONE/	0	100	36	8	288.00	SF	16.00	16.00	100	2024	2023		100	4,608	
4	0462	ST/AL FNC	0	100	100	0	500.00	SF	10.00	10.00	100	2024	2023		100	5,000	
5	0463	FENCE GATE	0	100	0	0	2.00	UT	300.00	300.00	100	2024	2023		100	600	

LAND DESCRIPTION

TOTAL OB/XF 17,914

LN	USE CODE	CLS	LAND USE DESCRIPTION	CAP	RD	LOC ZONE	FRONT	DEPTH	TOT LND UTS	UNIT TYPE	DT	DPTH FACT	% COND	TOT ADJ	UNIT PRICE	ADJ UNIT PRICE	LAND VALUE	OTHER ADJUSTMENTS AND NOTES	YEAR	DENSITY	DECL	FRZ	YR	CONSRV
1	000135	C	SFR CNSVTN	100		PUD	60.00	120.00	1.00	LT		1.00	1.00	1.00	65,000.00	65,000.00	65,000							

REVIEW DATE 04/20/2023 BY KW Total Acres: 0.00 Total Land Value: 65,000 Market: 0 Agricultural: 0 Common: 65,000 PRINTED 08/06/2024 BY SYS