LOT 46
TRIBUTARY PHASE 1A UNIT 1
OR 2378/217

STEDDICK DAVID J & ANDREA T
75764 SPOONBILL LN
YULEE, FL 32097

2024

10-2N-26-2010-0046-0000

BUILDING CHARACTERISTICS

ELEMENT	CD	CONSTRUCTION
Exterior Wall	31	HARDIE BRD 100
Roof Structur	03	GABLE/HIP 100
Roof Cover	03	COMP SHNGL 100
Interior Wall	05	DRYWALL 100
Interior Floo	13	LVT/LAMNT 50
Interior Floo	14	CARPET 50
Air Condition	03	CENTRAL 100
Heating Type	04	AIR DUCTED 100
Bedrooms		4 100
Bathrooms		2.5 100
Frame	02	WOOD FRAME 100
Stories	2.	2. 100
Units		0 100
Occupancy	00	NONE 100
Quality	03	Quality Level 03

DOR CODE	0100	SINGLE FAMILY	
MAP NUM		MKT AREA	05
NEIGHBORHOOD/LOC	5020.00		

AREA TYPE	TOTAL GROSS AREA	PCT OF BASE	TOT ADJ AREA	SUBAREA MARKET VALUE
BAS	981	100	981	97,521
FGR	449	55	247	24,554
FOP	105	30	32	3,181
FSP	120	40	48	4,772
FUS	1,366	100	1,366	135,794
STR	74	10	7	696
TOTALS	3,095		2,681	266,518

MARKET ADJUSTMENTS

TYPE	MDL	EFF. AREA	TOT ADJ PTS	EFF. BASE RATE	REPL. COST NEW	AYB	EYB	ECON	FNCT		NORM	% COND
0100	01	2,681	104.6400	99.41	266,518	2022	2022	0	0	0	0.00	100.00

1 SINGLE FAM – 100% - 2024 Heated Area: 2347 HX Base Yr 2024

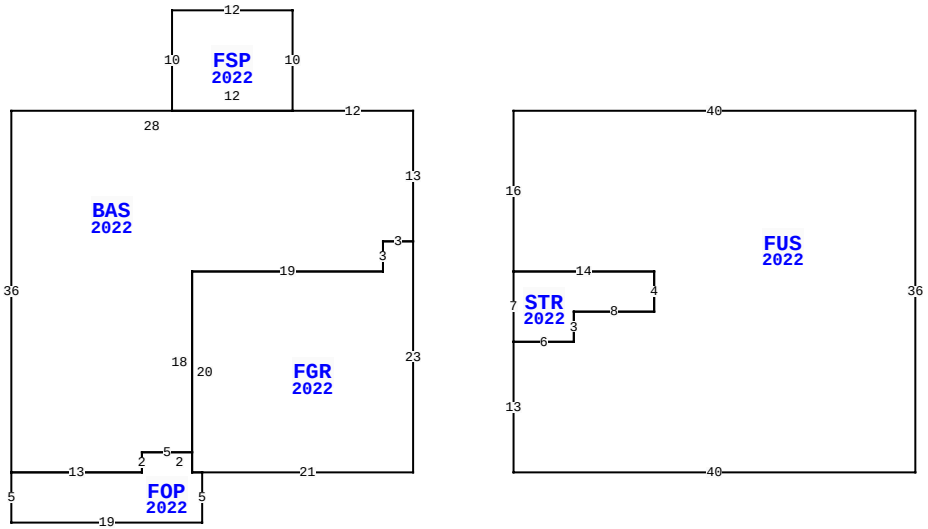

75764 SPOONBILL LN, YULEE

BLD DATE		LGL DATE	
XF DATE		LAND DATE	
INC DATE		AG DATE	

NASSAU COUNTY PROPERTY

PAGE 1 of 1 4

VALUATION SUMMARY

VALUATION BY		STANDARD
Tax Group: 4	Tax Dist:	
BUILDING MARKET VALUE		266,518
TOTAL MARKET OB/XF VALUE		6,790
TOTAL LAND VALUE - MARKET		65,000
TOTAL MARKET VALUE		338,308
SOH/AGL Deduction		0
ASSESSED VALUE		338,308
TOTAL EXEMPTION VALUE	HX HB	50,000
BASE TAXABLE VALUE		288,308
TOTAL JUST VALUE		338,308
NCON VALUE		0
INCOME VALUE		
PREVIOUS YEAR MKT VALUE		324,984

PERMIT NUM	DESCRIPTION	AMT	ISSUED
C2106187	CO ISSUED	0	01/24/2022
21006187	NEW CONSTR	336,392	05/13/2021

SALES DATA

OFF RECORD Number	DATE	TYPE INST	Q U /	V I /	RSN CD	SALE PRICE
2685/767	12/15/2023	WD	Q	I	02	438,000
GRANTOR: PETERMAN JOHN FRANK J						
GRANTEE: STEDDICK DAVID J &						
2537/0694	1/31/2022	SW	Q	I	02	353,500
GRANTOR: LENNAR HOMES LLC						
GRANTEE: PETERMAN JOHN FRANK						

BUILDING NOTES

BUILDING DIMENSIONS

BAS=[YR=2022] W12 FSP=[YR=2022] N10 W12 S10 E12$ W28 S36 FOP=[YR=2022] S5 E19 N5 FGR=[YR=2022] E21 N23 W3 S3 W19 S20 E1$ W1 N2 W5 S2 W13$ E13 N2 E5 N18 E19 N3 E3 N13$ PTR= E10 FUS=[YR=2022] E40 S36 W40 N13 STR=[YR=2022] N7 E14 S4 W8 S3 W6$ E6 N3 E8 N4 W14 N16$ W10$.

EXTRA FEATURES

LN	OB/XF CODE	DESCRIPTION	BLD	CAP	L	W	UNITS	UT	Adj R	ADJ UNIT PRICE	ORIG COND	YEAR ON	YEAR ACTUAL	Q	% COND	OB/XF MKT VALUE	NOTES
1	0855	CONC PAVER	0	100	0	0	529.00	SF	10.00	10.00	100	2022	2022	3	100	5,290	
2	0855	CONC PAVER	0	100	0	0	150.00	SF	10.00	10.00	100	2022	2022	3	100	1,500	

LAND DESCRIPTION

TOTAL OB/XF 6,790

LN	USE CODE	CLS	LAND USE DESCRIPTION	CAP	RD	LOC ZONE	FRONT	DEPTH	TOT LND UTS	UNIT TYPE	DT	DPTH FACT	% COND	TOT ADJ	UNIT PRICE	ADJ UNIT PRICE	LAND VALUE	OTHER ADJUSTMENTS AND NOTES	YEAR	DENSITY	DECL	FRZ	YR	CONSRV
1	000135	C	SFR CNSVTN	100		PUD	50.00	120.00	1.00	LT		1.00	1.00	1.00	65,000.00	65,000.00	65,000							

REVIEW DATE 03/29/2022 BY HS Total Acres: 0.00 Total Land Value: 65,000 Market: 0 Agricultural: 0 Common: 65,000 PRINTED 08/06/2024 BY SYS