IN OR 958/1373 & OR 958/1366
PARCELS 15-25 & 15-24

KING DAVID R & CRYSTAL D/
23550 COUNTY ROAD 121
HILLIARD, FL 32046

2024

10-2N-23-0000-0015-0250

NASSAU COUNTY PROPERTY

BUILDING CHARACTERISTICS

ELEMENT	CD	CONSTRUCTION
Exterior Wall	20	FACE BRICK 90
Exterior Wall	05	AVERAGE 10
Roof Structur	03	GABLE/HIP 100
Roof Cover	03	COMP SHNGL 100
Interior Wall	05	DRYWALL 100
Interior Floo	14	CARPET 70
Interior Floo	11	CLAY TILE 30
Air Condition	03	CENTRAL 100
Heating Type	04	AIR DUCTED 100
Bedrooms		3 100
Bathrooms		2.5 100
Frame	02	WOOD FRAME 100
Stories	2.	2. 100
Units		0 100
Occupancy	00	NONE 100
Quality	01	Quality Level 01
DOR CODE	0100	SINGLE FAMILY
MAP NUM		MKT AREA 09
NEIGHBORHOOD/LOC	9001.00	

AREA TYPE	TOTAL GROSS AREA	PCT OF BASE	TOT ADJ AREA	SUBAREA MARKET VALUE
BAS	2,066	100	2,066	200,548
FGR	768	55	422	40,963
FOP	128	30	38	3,689
FOP	502	30	151	14,658
FUS	734	100	734	71,250
UOP	128	20	26	2,524
TOTALS	4,326		3,437	333,631

MARKET ADJUSTMENTS

TYPE	MDL	EFF. AREA	TOT ADJ PTS	EFF. BASE RATE	REPL. COST NEW	AYB	EYB	ECON	FNCT		NORM	% COND
0900	01	3,437	91.5768	114.47	393,433	2002	2002	0	0	0	15.20	84.80

1 SNGL FAM – 100% - 2003 Heated Area: 2800 HX Base Yr 2003

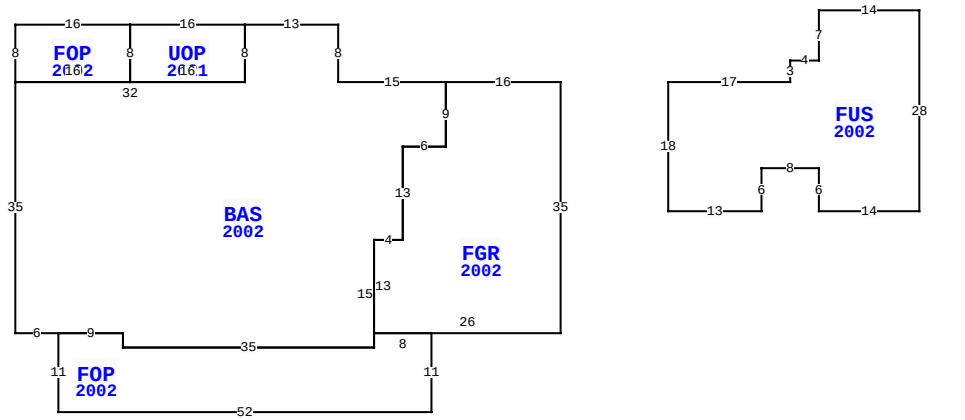

23550 CR 121, HILLIARD

BLD DATE		LGL DATE	
XF DATE		LAND DATE	06/16/2023 MLU
INC DATE		AG DATE	

VALUATION SUMMARY

VALUATION BY	STANDARD
Tax Group: 6	Tax Dist:
BUILDING MARKET VALUE	363,251
TOTAL MARKET OB/XF VALUE	8,874
TOTAL LAND VALUE - MARKET	75,000
TOTAL MARKET VALUE	447,125
SOH/AGL Deduction	210,821
ASSESSED VALUE	236,304
TOTAL EXEMPTION VALUE	HX HB 50,000
BASE TAXABLE VALUE	186,304
TOTAL JUST VALUE	447,125
NCON VALUE	0
INCOME VALUE	
PREVIOUS YEAR MKT VALUE	433,547

PERMIT NUM	DESCRIPTION	AMT	ISSUED
20011576	GARAGE	88,872	11/23/2020
B0108050	NEW CONSTR	139,843	03/01/2001

SALES DATA

OFF RECORD Number	DATE	TYPE INST	Q / U	V / I	RSN CD	SALE PRICE
0958/1373	11/16/2000	WD	U	V	01	18,700

GRANTOR: KING RICHARD H & CARO

GRANTEE: KING DAVID R & CRYS

BUILDING NOTES

BUILDING DIMENSIONS

FGR=[YR=2002] W16 BAS=[YR=2002] W15 N8 W13 UOP=[YR=2021] W16 FOP=[YR=2002] W16 S8 E16 N8$ S8 E16 N8$ S8 W32S35 E6 FOP=[YR=2002] S11 E52 N11 W8 S2 W35 N2 W9$ E9 S2 E35 N15 E4 N13 E6 N9$ S9 W6 S13 W4 S13 E26 N35$ PTR=E15 FUS=[YR=2002] E17 N3 E4 N7 E14 S28 W14 N6 W8 S6 W13 N18$ W15$.

EXTRA FEATURES

LN	OB/XF CODE	DESCRIPTION	BLD	CAP	L	W	UNITS	UT	Adj R	ADJ UNIT PRICE	ORIG COND	YEAR ON	YEAR ACTUAL	Q	% COND	OB/XF MKT VALUE	NOTES
1	0812	CONCRETE C	0	100	0	0	1,026.00	SF	4.00	4.00	100	2002	2002	3	82	3,365	
2	0810	CONCRETE A	0	100	0	0	444.00	SF	6.50	6.50	100	2010	2010	3	91	2,626	
3	0811	CONCRETE B	0	100	56	5	560.00	SF	5.20	5.20	100	2021	2021	3	99	2,883	

LAND DESCRIPTION

TOTAL OB/XF 8,874

LN	USE CODE	CLS	LAND USE DESCRIPTION	CAP	RD	LOC ZONE	FRONT	DEPTH	TOT LND UTS	UNIT TYPE	DT	DPTH FACT	% COND	TOT ADJ	UNIT PRICE	ADJ UNIT PRICE	LAND VALUE	OTHER ADJUSTMENTS AND NOTES	YEAR	DENSITY	DECL	FRZ	YR	CONSRV
1	000115	C	SFR ACRES	100	0004	OR	0.00	0.00	3.00	AC		1.00	1.00	1.00	25,000.00	25,000.00	75,000							

REVIEW DATE 12/09/2021 BY TW Total Acres: 3.00 Total Land Value: 75,000 Market: 0 Agricultural: 0 Common: 75,000 PRINTED 08/06/2024 BY SYS

IN OR 958/1373 & OR 958/1366
PARCELS 15-25 & 15-24

KING DAVID R & CRYSTAL D/
23550 COUNTY ROAD 121
HILLIARD, FL 32046

2024

10-2N-23-0000-0015-0250

NASSAU COUNTY PROPERTY

BUILDING CHARACTERISTICS

ELEMENT	CD	CONSTRUCTION
Exterior Wall	25	MOD METAL 100
Roof Structur	03	GABLE/HIP 100
Roof Cover	12	MODULAR MT 100
Interior Wall		N/A 100
Interior Floo	03	CONC FINSH 100
Air Condition	99	N/A 100
Heating Type		N/A 100
Bedrooms		0 100
Bathrooms		0 100
Frame	05	STEEL 100
Stories	0	0 100
Units		0 100
Occupancy	00	NONE 100
Quality	06	Quality Level 06

DOR CODE 0100 SINGLE FAMILY
MAP NUM | MKT AREA 09
NEIGHBORHOOD/LOC 9001.00

AREA TYPE	TOTAL GROSS AREA	PCT OF BASE	TOT ADJ AREA	SUBAREA MARKET VALUE
BAS	1,440	100	1,440	26,658
UCP	400	20	80	1,481
UCP	400	20	80	1,481
TOTALS	2,240		1,600	29,620

MARKET ADJUSTMENTS

TYPE	MDL	EFF. AREA	TOT ADJ PTS	EFF. BASE RATE	REPL. COST NEW	AYB	EYB	ECON	FNCT		NORM	% COND
6500	01	1,600	53.9580	18.89	30,224	2021	2021	0	0	0	2.00	98.00

2 GARAGE RES – 100% - 2003 Heated Area: 1440 HX Base Yr 2003

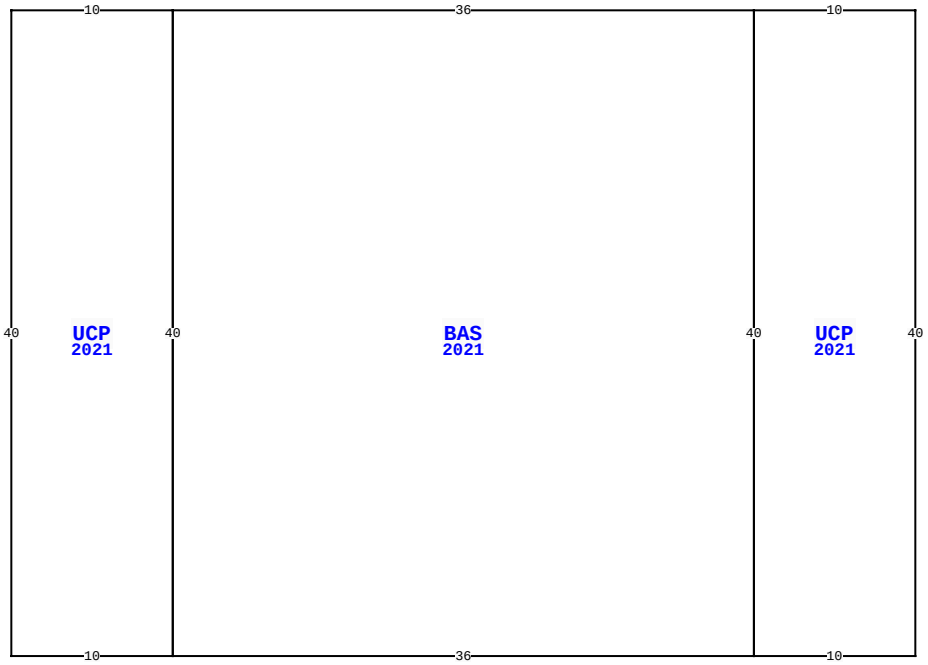

23550 CR 121, HILLIARD

BLD DATE		LGL DATE	
XF DATE		LAND DATE	06/16/2023 MLU
INC DATE		AG DATE	

VALUATION SUMMARY

VALUATION BY		STANDARD
Tax Group: 6	Tax Dist:	
BUILDING MARKET VALUE		363,251
TOTAL MARKET OB/XF VALUE		8,874
TOTAL LAND VALUE - MARKET		75,000
TOTAL MARKET VALUE		447,125
SOH/AGL Deduction		210,821
ASSESSED VALUE		236,304
TOTAL EXEMPTION VALUE	HX HB	50,000
BASE TAXABLE VALUE		186,304
TOTAL JUST VALUE		447,125
NCON VALUE		0
INCOME VALUE		
PREVIOUS YEAR MKT VALUE		433,547

PERMIT NUM	DESCRIPTION	AMT	ISSUED

SALES DATA

OFF RECORD Number	DATE	TYPE INST	Q / U	V / I	RSN CD	SALE PRICE
0958/1373	11/16/2000	WD	U	V	01	18,700

GRANTOR: KING RICHARD H & CARO
GRANTEE: KING DAVID R & CRYS

BUILDING NOTES

BUILDING DIMENSIONS

UCP=[YR=2021] W10 BAS=[YR=2021] W36 UCP=[YR=2021] W10 S40 E10 N40$ S40 E36 N40 $ S40 E10 N40$.

EXTRA FEATURES

L N	OB/XF CODE	DESCRIPTION	BLD	CAP	L	W	UNITS	UT	Adj R	ADJ UNIT PRICE	ORIG COND	YEAR ON	YEAR ACTUAL	Q	% COND	OB/XF MKT VALUE	NOTES

LAND DESCRIPTION

TOTAL OB/XF 0

L N	USE CODE	CLS	LAND USE DESCRIPTION	CAP	R D	LOC ZONE	FRONT	DEPTH	TOT LND UTS	UNIT TYPE	D T	DPTH FACT	% COND	TOT ADJ	UNIT PRICE	ADJ UNIT PRICE	LAND VALUE	OTHER ADJUSTMENTS AND NOTES	YEAR	DENSITY	DECL	FRZ	YR	CONSRV

REVIEW DATE 12/09/2021 BY TW Total Acres: 3.00 Total Land Value: 75,000 Market: 0 Agricultural: 0 Common: 75,000 PRINTED 08/06/2024 BY SYS