LOT 10
SPRING MEADOWS #2 PB 5/363

BURNS JANICE P
86194 SPRING MEADOW AVE
YULEE, FL 32097

2024

09-2N-27-1951-0010-0000

NASSAU COUNTY PROPERTY

BUILDING CHARACTERISTICS

ELEMENT	CD	CONSTRUCTION
Exterior Wall	20	FACE BRICK 100
Roof Structur	03	GABLE/HIP 100
Roof Cover	03	COMP SHNGL 100
Interior Wall	05	DRYWALL 100
Interior Floo	15	HARDTILE 90
Interior Floo	14	CARPET 10
Air Condition	03	CENTRAL 100
Heating Type	04	AIR DUCTED 100
Bedrooms		3 100
Bathrooms		2 100
Frame	02	WOOD FRAME 100
Stories	1.5	1.5 100
Units		0 100
Occupancy	00	NONE 100
Quality	05	Quality Level 05
DOR CODE	0100	SINGLE FAMILY
MAP NUM		MKT AREA 04
NEIGHBORHOOD/LOC	4049.00	

AREA TYPE	TOTAL GROSS AREA	PCT OF BASE	TOT ADJ AREA	SUBAREA MARKET VALUE
BAS	2,190	100	2,190	223,623
FGR	508	55	279	28,489
FOP	54	30	16	1,634
FOP	162	30	49	5,004
UUS	425	50	212	21,648
TOTALS	3,339		2,746	280,397

MARKET ADJUSTMENTS

TYPE	MDL	EFF. AREA	TOT ADJ PTS	EFF. BASE RATE	REPL. COST NEW	AYB	EYB	ECON	FNCT		NORM	% COND
0100	01	2,746	125.3472	119.08	326,994	2004	2004	0	0	0	14.25	85.75

1 SINGLE FAM – 100% - 2020 Heated Area: 2190 HX Base Yr 2020

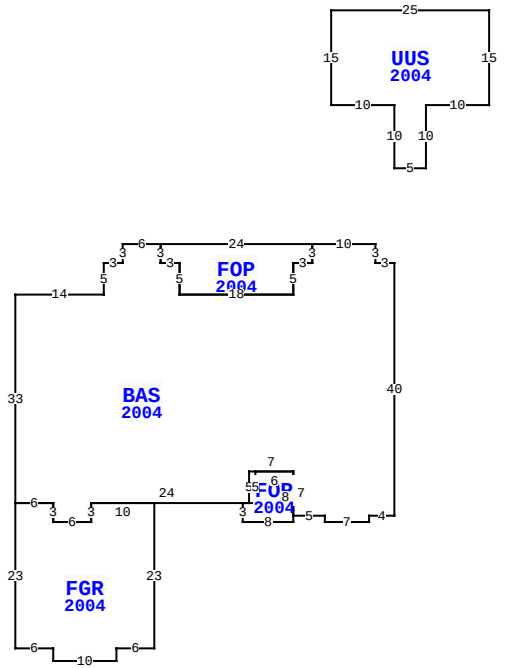

86194 SPRING MEADOW AVE, YULEE

BLD DATE	03/16/2023 NW	LGL DATE	
XF DATE		LAND DATE	
INC DATE		AG DATE	

VALUATION SUMMARY

VALUATION BY		STANDARD
Tax Group: 4	Tax Dist:	
BUILDING MARKET VALUE		294,944
TOTAL MARKET OB/XF VALUE		9,084
TOTAL LAND VALUE - MARKET		70,000
TOTAL MARKET VALUE		374,028
SOH/AGL Deduction		166,053
ASSESSED VALUE		207,975
TOTAL EXEMPTION VALUE	HX HB WX	55,000
BASE TAXABLE VALUE		152,975
TOTAL JUST VALUE		374,028
NCON VALUE		0
INCOME VALUE		
PREVIOUS YEAR MKT VALUE		338,162

PERMIT NUM	DESCRIPTION	AMT	ISSUED
B0311734	ADDITION	11,880	09/01/2003
B0311337	NEW CONSTR	187,174	06/01/2003

SALES DATA

OFF RECORD Number	DATE	TYPE INST	Q U	V I	RSN CD	SALE PRICE
2283/0073	6/17/2019	WD	Q	I	01	329,900
GRANTOR: WILSFORD LAUREN ROSE						
GRANTEE: BURNS JANICE P						
1767/1669	12/02/2011	QC	U	I	11	100
GRANTOR: RICE JAMES E III						
GRANTEE: TOFFOLO LAUREN ROSE						

BUILDING NOTES

BUILDING DIMENSIONS

BAS=[YR=2004] W3 N3 W10 FOP=[YR=2004] W24 S3 E3 S5 E18 N5 E3 N3$ S3 W3 S5 W18 N5 W3 N3 W6 S3 W3 S5 W14 S33 FGR=[YR=2004] S23 E6 S2 E10 N2 E6 N23 W10 S3 W6 N3 W6$ E6 S3 E6 N3 E24 FOP=[YR=2004] S3 E8 N8 W6 S5 W2$ E1 N5 E7 S7 E5S1 E7 N1 E4 N40$ PTR=N15 UUS=[YR=2004] N10 W10 N15 E25 S15 W10 S10 W5$ S15$.

EXTRA FEATURES

LN	OB/XF CODE	DESCRIPTION	BLD	CAP	L	W	UNITS	UT	Adj R	ADJ UNIT PRICE	ORIG COND	YEAR ON	YEAR ACTUAL	Q	% COND	OB/XF MKT VALUE	NOTES
1	0500	FP-PRE FAB	0	100	0	0	1.00	UT	3,500.00	3,500.00	100	2004	2004	3	88	3,080	
2	0812	CONCRETE C	0	100	0	0	1,787.00	SF	4.00	4.00	100	2004	2004	3	84	6,004	

LAND DESCRIPTION

TOTAL OB/XF 9,084

LN	USE CODE	CLS	LAND USE DESCRIPTION	CAP	RD	LOC ZONE	FRONT	DEPTH	TOT LND UTS	UNIT TYPE	DT	DPTH FACT	% COND	TOT ADJ	UNIT PRICE	ADJ UNIT PRICE	LAND VALUE	OTHER ADJUSTMENTS AND NOTES	YEAR	DENSITY	DECL	FRZ	YR	CONSRV
1	000100	C	SFR	100	0006	RSF-1	0.00	0.00	1.00	LT		1.00	1.00	1.00	70,000.00	70,000.00	70,000							

REVIEW DATE 05/12/2019 BY KBA Total Acres: 0.00 Total Land Value: 70,000 Market: 0 Agricultural: 0 Common: 70,000 PRINTED 08/06/2024 BY SYS

LOT 10
SPRING MEADOWS #2 PB 5/363

BURNS JANICE P
86194 SPRING MEADOW AVE
YULEE, FL 32097

2024

09-2N-27-1951-0010-0000

BUILDING CHARACTERISTICS

ELEMENT	CD	CONSTRUCTION
Exterior Wall	05	AVERAGE 100
Roof Structur		N/A 100
Roof Cover	03	COMP SHNGL 100
Interior Wall	05	DRYWALL 100
Interior Floo	14	CARPET 100
Air Condition	01	NONE 100
Heating Type	01	NONE 100
Bedrooms		0 100
Bathrooms		0 100
Frame	02	WOOD FRAME 100
Stories	0	0 100
Units		0 100
Occupancy	00	NONE 100

Quality	00	Quality Level 00
DOR CODE	0100	SINGLE FAMILY
MAP NUM		MKT AREA 04
NEIGHBORHOOD/LOC	4049.00	

AREA TYPE	TOTAL GROSS AREA	PCT OF BASE	TOT ADJ AREA	SUBAREA MARKET VALUE
BAS	360	100	360	14,547
TOTALS	360		360	14,547

MARKET ADJUSTMENTS

TYPE	MDL	EFF. AREA	TOT ADJ PTS	EFF. BASE RATE	REPL. COST NEW	AYB	EYB	ECON	FNCT		NORM	% COND
0150	01	360	86.9000	43.45	15,642	2008	2008	0	0	0	7.00	93.00

2 ACCESORY U – 100% - 2020 Heated Area: 360 HX Base Yr 2020

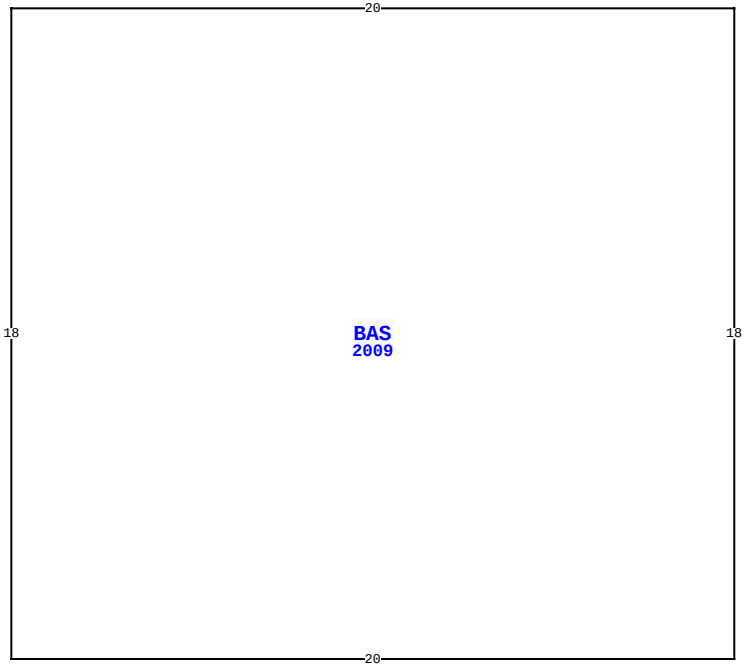

86194 SPRING MEADOW AVE, YULEE

BLD DATE	03/16/2023 NW	LGL DATE	
XF DATE		LAND DATE	
INC DATE		AG DATE	

NASSAU COUNTY PROPERTY

PAGE 2 of 2 4

VALUATION SUMMARY

VALUATION BY		STANDARD
Tax Group: 4	Tax Dist:	
BUILDING MARKET VALUE		294,944
TOTAL MARKET OB/XF VALUE		9,084
TOTAL LAND VALUE - MARKET		70,000
TOTAL MARKET VALUE		374,028
SOH/AGL Deduction		166,053
ASSESSED VALUE		207,975
TOTAL EXEMPTION VALUE	HX HB WX	55,000
BASE TAXABLE VALUE		152,975
TOTAL JUST VALUE		374,028
NCON VALUE		0
INCOME VALUE		
PREVIOUS YEAR MKT VALUE		338,162

PERMIT NUM	DESCRIPTION	AMT	ISSUED

SALES DATA

OFF RECORD Number	DATE	TYPE INST	Q / U	V / I	RSN CD	SALE PRICE
2283/0073	6/17/2019	WD	Q	I	01	329,900
GRANTOR: WILSFORD LAUREN ROSE						
GRANTEE: BURNS JANICE P						
1767/1669	12/02/2011	QC	U	I	11	100
GRANTOR: RICE JAMES E III						
GRANTEE: TOFFOLO LAUREN ROSE						

BUILDING NOTES

BUILDING DIMENSIONS

BAS=[YR=2009] W20 S18 E20 N18$.

EXTRA FEATURES

L N	OB/XF CODE	DESCRIPTION	BLD	CAP	L	W	UNITS	UT	Adj R	ADJ UNIT PRICE	ORIG COND	YEAR ON	YEAR ACTUAL	Q	% COND	OB/XF MKT VALUE	NOTES

LAND DESCRIPTION

TOTAL OB/XF 0

L N	USE CODE	CLS	LAND USE DESCRIPTION	CAP	R D	LOC ZONE	FRONT	DEPTH	TOT LND UTS	UNIT TYPE	D T	DPTH FACT	% COND	TOT ADJ	UNIT PRICE	ADJ UNIT PRICE	LAND VALUE	OTHER ADJUSTMENTS AND NOTES	YEAR	DENSITY	DECL	FRZ	YR	CONSRV

REVIEW DATE 05/12/2019 BY KBA Total Acres: 0.00 Total Land Value: 70,000 Market: 0 Agricultural: 0 Common: 70,000 PRINTED 08/06/2024 BY SYS