LOT 69
IN OR 2138/599
CARTESIAN POINTE #1 PB 6/345

AH4R PROPERTIES LLC
ATTN:PROPERTY TAX DEPARTMENT, 23975 PARK SORRENTO, SUITE 3
CALABASAS, CA 91302

2024

09-2N-27-0230-0069-0000

BUILDING CHARACTERISTICS

ELEMENT	CD	CONSTRUCTION
Exterior Wall	05	AVERAGE 70
Exterior Wall	16	WD FR STUC 30
Roof Structur	03	GABLE/HIP 100
Roof Cover	03	COMP SHNGL 100
Interior Wall	05	DRYWALL 100
Interior Floo	14	CARPET 80
Interior Floo	08	SHT VINYL 20
Air Condition	03	CENTRAL 100
Heating Type	04	AIR DUCTED 100
Bedrooms		3 100
Bathrooms		2.5 100
Frame	02	WOOD FRAME 100
Stories	2.	2. 100
Units		0 100
Occupancy	00	NONE 100
Quality	04	Quality Level 04

DOR CODE	0100	SINGLE FAMILY	
MAP NUM		MKT AREA	04
NEIGHBORHOOD/LOC	4050.00		

AREA TYPE	TOTAL GROSS AREA	PCT OF BASE	TOT ADJ AREA	SUBAREA MARKET VALUE
BAS	945	100	945	87,714
FGR	520	55	286	26,546
FOP	100	30	30	2,784
FOP	140	30	42	3,899
FUS	1,158	100	1,158	107,484
TOTALS	2,863		2,461	228,428

MARKET ADJUSTMENTS

TYPE	MDL	EFF. AREA	TOT ADJ PTS	EFF. BASE RATE	REPL. COST NEW	AYB	EYB	ECON	FNCT		NORM	% COND
0100	01	2,461	107.7552	102.37	251,933	2004	2004	0	0	0	9.33	90.67

1 SINGLE FAM – 0% - 0 Heated Area: 2103 HX Base Yr

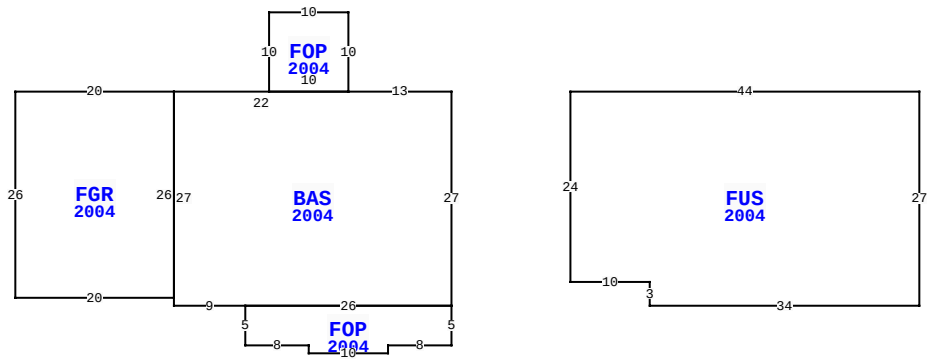

86072 CARTESIAN POINTE DR, YULEE

BLD DATE	03/20/2023	NW	LGL DATE
XF DATE			LAND DATE
INC DATE			AG DATE

NASSAU COUNTY PROPERTY

PAGE 1 of 1 4

VALUATION SUMMARY

VALUATION BY	STANDARD
Tax Group: 4	Tax Dist:
BUILDING MARKET VALUE	228,428
TOTAL MARKET OB/XF VALUE	7,195
TOTAL LAND VALUE - MARKET	50,000
TOTAL MARKET VALUE	285,623
SOH/AGL Deduction	11,075
ASSESSED VALUE	274,548
TOTAL EXEMPTION VALUE	0
BASE TAXABLE VALUE	274,548
TOTAL JUST VALUE	285,623
NCON VALUE	0
INCOME VALUE	
PREVIOUS YEAR MKT VALUE	275,958

PERMIT NUM	DESCRIPTION	AMT	ISSUED
B0311809	NEW CONSTR	149,123	10/01/2003

SALES DATA

OFF RECORD Number	DATE	TYPE INST	Q / U	V / I	RSN CD	SALE PRICE
2138/0599	7/31/2017	WD	Q	I	01	200,000
GRANTOR: BARTON DAVID A						
GRANTEE: AH4R PROPERTIES LLC						
1642/1311	9/16/2009	WD	U	I	12	174,000
GRANTOR: THE BANK OF NEW YORK						
GRANTEE: BARTON DAVID A						

BUILDING NOTES

BUILDING DIMENSIONS

BAS=[YR=2004] W13 FOP=[YR=2004] N10 W10 S10 E10$ W22
FGR=[YR=2004] W20 S26 E20 N26$ S27 E9 FOP=[YR=2004] S5 E8 S1
E10 N1 E8 N5 W26$ E26 N27$ PTR=E15 FUS=[YR=2004] E44 S27 W34
N3 W10 N24$ W15$.

EXTRA FEATURES

LN	OB/XF CODE	DESCRIPTION	BLD	CAP	L	W	UNITS	UT	Adj R	ADJ UNIT PRICE	ORIG COND	YEAR ON	YEAR ACTUAL	Q	% COND	OB/XF MKT VALUE	NOTES
1	0811	CONCRETE B	0	0	0	0	942.00	SF	5.20	5.20	100	2004	2004	3	84	4,115	
2	0500	FP-PRE FAB	0	0	0	0	1.00	UT	3,500.00	3,500.00	100	2004	2004	3	88	3,080	

LAND DESCRIPTION

TOTAL OB/XF 7,195

LN	USE CODE	CLS	LAND USE DESCRIPTION	CAP	RD	LOC ZONE	FRONT	DEPTH	TOT LND UTS	UNIT TYPE	DT	DPTH FACT	% COND	TOT ADJ	UNIT PRICE	ADJ UNIT PRICE	LAND VALUE	OTHER ADJUSTMENTS AND NOTES	YEAR	DENSITY	DECL	FRZ	YR	CONSRV
1	000100	C	SFR	0	0003	PUD	0.00	0.00	1.00	LT		1.00	1.00	1.00	50,000.00	50,000.00	50,000							

REVIEW DATE 05/12/2019 BY KBA Total Acres: 0.00 Total Land Value: 50,000 Market: 0 Agricultural: 0 Common: 50,000 PRINTED 08/06/2024 BY SYS