LOT 29
CARTESIAN POINTE #1 PB 6/345

YAMASA CO LTD
PO BOX 4090
SCOTTSDALE, AZ 85261

2024

09-2N-27-0230-0029-0000

NASSAU COUNTY PROPERTY

BUILDING CHARACTERISTICS

ELEMENT	CD	CONSTRUCTION
Exterior Wall	16	WD FR STUC 100
Roof Structur	03	GABLE/HIP 100
Roof Cover	03	COMP SHNGL 100
Interior Wall	05	DRYWALL 100
Interior Floo	14	CARPET 80
Interior Floo	08	SHT VINYL 20
Air Condition	03	CENTRAL 100
Heating Type	04	AIR DUCTED 100
Bedrooms		4 100
Bathrooms		3 100
Frame	02	WOOD FRAME 100
Stories	1.	1. 100
Units		0 100
Occupancy	00	NONE 100
Quality	04	Quality Level 04

DOR CODE 0100 SINGLE FAMILY
MAP NUM | MKT AREA 04
NEIGHBORHOOD/LOC 4050.00

AREA TYPE	TOTAL GROSS AREA	PCT OF BASE	TOT ADJ AREA	SUBAREA MARKET VALUE
BAS	1,103	100	1,103	104,194
FGR	445	55	245	23,144
FOP	88	30	26	2,456
FUS	1,300	100	1,300	122,803
PTO	974	5	49	4,629
TOTALS	3,910		2,723	257,225

MARKET ADJUSTMENTS

TYPE	MDL	EFF. AREA	TOT ADJ PTS	EFF. BASE RATE	REPL. COST NEW	AYB	EYB	ECON	FNCT		NORM	% COND
0100	01	2,723	109.8720	104.38	284,227	2004	2004	0	0	0	9.50	90.50

1 SINGLE FAM – 0% - 2024 Heated Area: 2403 HX Base Yr

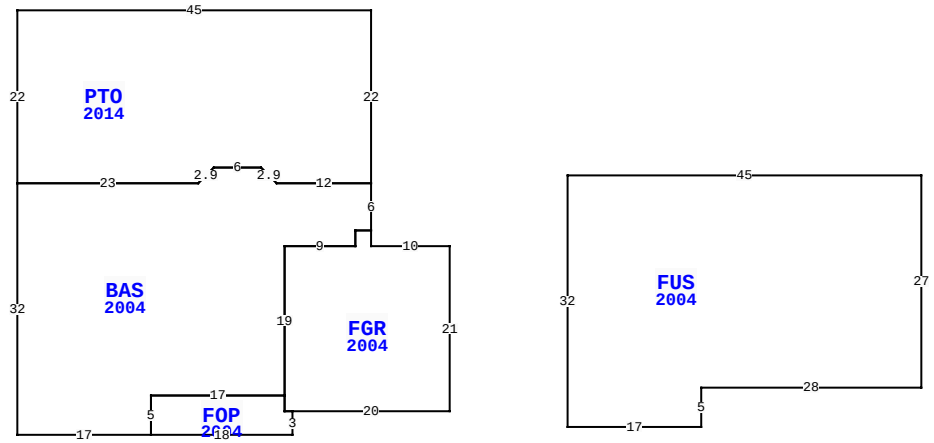

86030 ALISON CT, YULEE

BLD DATE		LGL DATE	
XF DATE		LAND DATE	
INC DATE		AG DATE	

NASSAU COUNTY PROPERTY — VALUATION SUMMARY

VALUATION BY	STANDARD
Tax Group: 4	Tax Dist:
BUILDING MARKET VALUE	257,225
TOTAL MARKET OB/XF VALUE	3,665
TOTAL LAND VALUE - MARKET	50,000
TOTAL MARKET VALUE	310,890
SOH/AGL Deduction	0
ASSESSED VALUE	310,890
TOTAL EXEMPTION VALUE	0
BASE TAXABLE VALUE	310,890
TOTAL JUST VALUE	310,890
NCON VALUE	0
INCOME VALUE	
PREVIOUS YEAR MKT VALUE	298,741

MISC ALUMN STRG = NV

PERMIT NUM	DESCRIPTION	AMT	ISSUED
B1428450	PATIO SLAB	1,950	03/01/2014
B1428349	SHED	12,113	02/01/2014
B0311988	NEW CONSTR	168,059	11/01/2003

SALES DATA

OFF RECORD Number	DATE	TYPE INST	Q / U	V / I	RSN CD	SALE PRICE
2666/932	9/07/2023	WD	Q	I	01	339,500
GRANTOR: OPENDOOR PROPERTY TRU						
GRANTEE: YAMASA CO LTD						
2659/1177	8/07/2023	WD	Q	I	01	327,200
GRANTOR: SELLERS DAVID M & EME						
GRANTEE: OPENDOOR PROPERTY T						

BUILDING NOTES

BUILDING DIMENSIONS

FUS=[YR=2004;ORIG=25,31] N32 E45 S27 W28 S5 W17 $
BAS=[YR=2004;ORIG=0,0] W12 U2L2 W6 D2L2 W23 S32 E17 N5 E17 N19 E9 N2 E2 N6 $
PTO=[YR=2014;ORIG=0,0] N22 W45 S22 E23 U2R2 E6 D2R2 E12 $
FGR=[YR=2004;ORIG=-10,29] E20 N21 W10 N2 W2 S2 W9 S19 S2 E1 $
FOP=[YR=2004;ORIG=-28,32] E18 N3 W1 N2 W17 S5 $
.

EXTRA FEATURES

LN	OB/XF CODE	DESCRIPTION	BLD	CAP	L	W	UNITS	UT	Adj R	ADJ UNIT PRICE	ORIG COND	YEAR ON	YEAR ACTUAL	Q	% COND	OB/XF MKT VALUE	NOTES
1	0811	CONCRETE B	0	0	0	0	839.00	SF	5.20	5.20	100	2004	2004	3	84	3,665	

LAND DESCRIPTION

TOTAL OB/XF 3,665

LN	USE CODE	CLS	LAND USE DESCRIPTION	CAP	RD	LOC ZONE	FRONT	DEPTH	TOT LND UTS	UNIT TYPE	DT	DPTH FACT	% COND	TOT ADJ	UNIT PRICE	ADJ UNIT PRICE	LAND VALUE	OTHER ADJUSTMENTS AND NOTES	YEAR	DENSITY	DECL	FRZ	YR	CONSRV
1	000100	C	SFR	0	0003	PUD	0.00	0.00	1.00	LT		1.00	1.00	1.00	50,000.00	50,000.00	50,000							

REVIEW DATE 04/11/2024 BY KWA Total Acres: 0.00 Total Land Value: 50,000 Market: 0 Agricultural: 0 Common: 50,000 PRINTED 08/06/2024 BY SYS