LOT 20
IN OR 1966/1823
CARTESIAN POINTE #1 PB 6/345

AMH 2015-1 BORROWER LLC
ATTN:PROPERTY TAX DEPARTMENT, 23975 PARK SORRENTO, SUITE 3
CALABASAS, CA 91302

2024

09-2N-27-0230-0020-0000

BUILDING CHARACTERISTICS

ELEMENT	CD	CONSTRUCTION
Exterior Wall	16	WD FR STUC 100
Roof Structur	03	GABLE/HIP 100
Roof Cover	03	COMP SHNGL 100
Interior Wall	05	DRYWALL 100
Interior Floo	14	CARPET 80
Interior Floo	08	SHT VINYL 20
Air Condition	03	CENTRAL 100
Heating Type	04	AIR DUCTED 100
Bedrooms		4 100
Bathrooms		3 100
Frame	02	WOOD FRAME 100
Stories	2.	2. 100
Units		0 100
Occupancy	00	NONE 100
Quality	04	Quality Level 04

DOR CODE 0100 SINGLE FAMILY
MAP NUM | MKT AREA 04
NEIGHBORHOOD/LOC 4050.00

AREA TYPE	TOTAL GROSS AREA	PCT OF BASE	TOT ADJ AREA	SUBAREA MARKET VALUE
BAS	1,057	100	1,057	100,766
FGR	405	55	223	21,259
FOP	93	30	28	2,670
FOP	100	30	30	2,860
FUS	1,250	100	1,250	119,166
TOTALS	2,905		2,588	246,721

MARKET ADJUSTMENTS

TYPE	MDL	EFF. AREA	TOT ADJ PTS	EFF. BASE RATE	REPL. COST NEW	AYB	EYB	ECON	FNCT		NORM	% COND
0100	01	2,588	110.8800	105.34	272,620	2004	2004	0	0	0	9.50	90.50

1 SINGLE FAM – 0% - 0 Heated Area: 2307 HX Base Yr

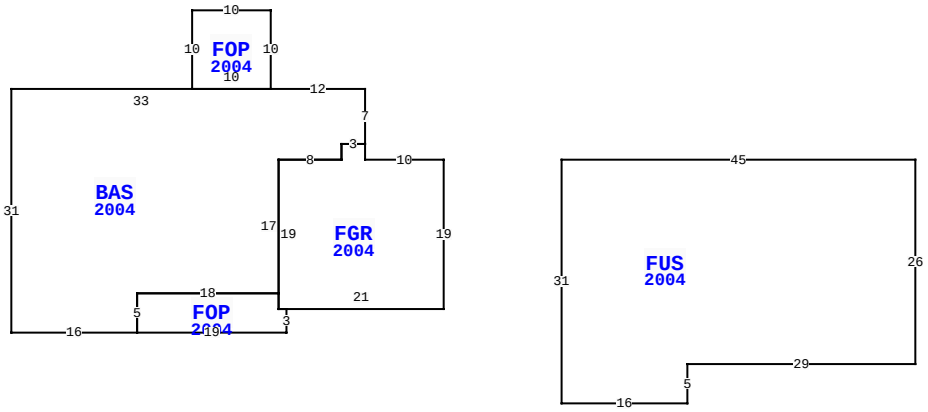

86106 AUGUSTUS AVE, YULEE

BLD DATE	03/20/2023 NW	LGL DATE	
XF DATE		LAND DATE	
INC DATE		AG DATE	

NASSAU COUNTY PROPERTY

VALUATION SUMMARY

VALUATION BY	STANDARD
Tax Group: 4	Tax Dist:
BUILDING MARKET VALUE	246,721
TOTAL MARKET OB/XF VALUE	7,770
TOTAL LAND VALUE - MARKET	50,000
TOTAL MARKET VALUE	304,491
SOH/AGL Deduction	14,756
ASSESSED VALUE	289,735
TOTAL EXEMPTION VALUE	0
BASE TAXABLE VALUE	289,735
TOTAL JUST VALUE	304,491
NCON VALUE	0
INCOME VALUE	
PREVIOUS YEAR MKT VALUE	293,590

PERMIT NUM	DESCRIPTION	AMT	ISSUED
B0412757	NEW CONSTR	168,026	05/01/2004
P0408023	NEW CONSTR	0	05/01/2004
R046153	REPAIR/RRF	1,500	05/01/2004

SALES DATA

OFF RECORD Number	DATE	TYPE INST	Q / U	V / I	RSN CD	SALE PRICE
1966/1823	3/06/2015	SW	U	I	11	100
GRANTOR: AMERICAN HOMES 4 RENT						
GRANTEE: AMH 2015-1 BORROWER						
1930/1165	8/01/2014	CT	U	I	18	132,700
GRANTOR: CLERK OF COURT						
GRANTEE: AMERICAN HOMES 4 RE						

BUILDING NOTES

BUILDING DIMENSIONS

FGR=[YR=2004] W10 N2 BAS=[YR=2004] N7 W12 FOP=[YR=2004] N10 W10 S10 E10 $ W33S31 E16 FOP=[YR=2004] E19 N3 W1 N2 W18 S5 $ N5 E18 N17 E8 N2 E3 $ W3 S2 W8 S19 E21 N19 $ PTR= E15 FUS=[YR=2004] E45 S26 W29 S5 W16 N31 $ W15 $.

EXTRA FEATURES

LN	OB/XF CODE	DESCRIPTION	BLD	CAP	L	W	UNITS	UT	Adj R	ADJ UNIT PRICE	ORIG COND	YEAR ON	YEAR ACTUAL	Q	% COND	OB/XF MKT VALUE	NOTES
1	0810	CONCRETE A	0	0	0	0	859.00	SF	6.50	6.50	100	2004	2004	3	84	4,690	
2	0500	FP-PRE FAB	0	0	0	0	1.00	UT	3,500.00	3,500.00	100	2004	2004	3	88	3,080	

LAND DESCRIPTION

TOTAL OB/XF 7,770

LN	USE CODE	CLS	LAND USE DESCRIPTION	CAP	RD	LOC ZONE	FRONT	DEPTH	TOT LND UTS	UNIT TYPE	DT	DPTH FACT	% COND	TOT ADJ	UNIT PRICE	ADJ UNIT PRICE	LAND VALUE	OTHER ADJUSTMENTS AND NOTES	YEAR	DENSITY	DECL	FRZ	YR	CONSRV
1	000100	C	SFR	0	0003	PUD	0.00	0.00	1.00	LT		1.00	1.00	1.00	50,000.00	50,000.00	50,000							

REVIEW DATE 05/12/2019 BY KBA Total Acres: 0.00 Total Land Value: 50,000 Market: 0 Agricultural: 0 Common: 50,000 PRINTED 08/06/2024 BY SYS