LOT 16
IN OR 1912/1632
CARTESIAN POINTE #1 PB 6/345

HERBERT DEBRA M & JAMES JOHN
86170 AUGUSTUS AV
YULEE, FL 32097

**2024**

**09-2N-27-0230-0016-0000**

## NASSAU COUNTY PROPERTY



## BUILDING CHARACTERISTICS

| ELEMENT | CD | CONSTRUCTION |
|---|---|---|
| Exterior Wall | 30 | VINYL 70 |
| Exterior Wall | 16 | WD FR STUC 30 |
| Roof Structur | 03 | GABLE/HIP 100 |
| Roof Cover | 03 | COMP SHNGL 100 |
| Interior Wall | 05 | DRYWALL 100 |
| Interior Floo | 14 | CARPET 50 |
| Interior Floo | 15 | HARDTILE 50 |
| Air Condition | 03 | CENTRAL 100 |
| Heating Type | 04 | AIR DUCTED 100 |
| Bedrooms | | 3 100 |
| Bathrooms | | 2 100 |
| Frame | 02 | WOOD FRAME 100 |
| Stories | 1. | 1. 100 |
| Units | | 0 100 |
| Occupancy | 00 | NONE 100 |
| Quality | 04 | Quality Level 04 |
| DOR CODE | 0100 | SINGLE FAMILY |
| MAP NUM | | MKT AREA 04 |
| NEIGHBORHOOD/LOC | 4050.00 | |

| AREA TYPE | TOTAL GROSS AREA | PCT OF BASE | TOT ADJ AREA | SUBAREA MARKET VALUE |
|---|---|---|---|---|
| BAS | 1,710 | 100 | 1,710 | 173,158 |
| FGR | 424 | 55 | 233 | 23,594 |
| FOP | 30 | 30 | 9 | 912 |
| FSP | 100 | 40 | 40 | 4,050 |
| PTO | 365 | 5 | 18 | 1,822 |
| STP | 9 | 10 | 1 | 101 |
| TOTALS | 2,638 | | 2,011 | 203,637 |

## MARKET ADJUSTMENTS

| TYPE | MDL | EFF. AREA | TOT ADJ PTS | EFF. BASE RATE | REPL. COST NEW | AYB | EYB | ECON | FNCT | | NORM | % COND |
|---|---|---|---|---|---|---|---|---|---|---|---|---|
| 0100 | 01 | 2,011 | 116.6886 | 110.85 | 222,919 | 2005 | 2005 | 0 | 0 | 0 | 8.65 | 91.35 |

1 SINGLE FAM – 100% - 2015 Heated Area: 1710 HX Base Yr 2015

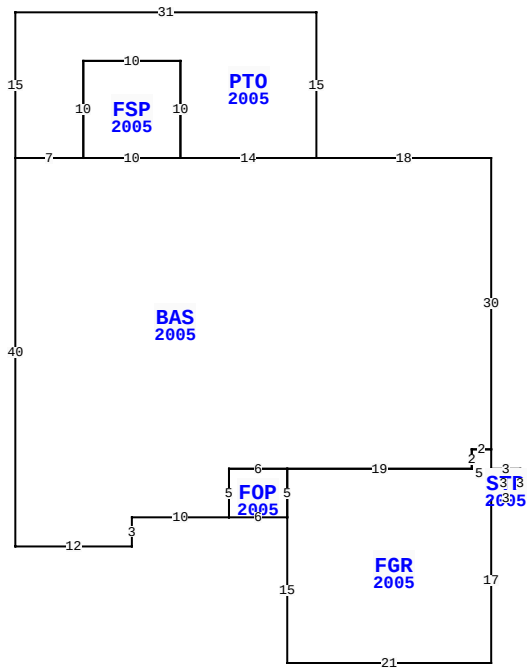


86170 AUGUSTUS AVE, YULEE

| | | | |
|---|---|---|---|
| BLD DATE | | LGL DATE | |
| XF DATE | | LAND DATE | |
| INC DATE | | AG DATE | |

## NASSAU COUNTY PROPERTY — VALUATION SUMMARY

| | | |
|---|---|---|
| VALUATION BY | | STANDARD |
| Tax Group: 4 | Tax Dist: | |
| BUILDING MARKET VALUE | | 203,637 |
| TOTAL MARKET OB/XF VALUE | | 6,728 |
| TOTAL LAND VALUE - MARKET | | 50,000 |
| TOTAL MARKET VALUE | | 260,365 |
| SOH/AGL Deduction | | 98,774 |
| ASSESSED VALUE | | 161,591 |
| TOTAL EXEMPTION VALUE | HX HB | 50,000 |
| BASE TAXABLE VALUE | | 111,591 |
| TOTAL JUST VALUE | | 260,365 |
| NCON VALUE | | 0 |
| INCOME VALUE | | |
| PREVIOUS YEAR MKT VALUE | | 259,672 |

| PERMIT NUM | DESCRIPTION | AMT | ISSUED |
|---|---|---|---|
| B0413371 | NEW CONSTR | 126,010 | 07/01/2004 |

## SALES DATA

| OFF RECORD Number | DATE | TYPE INST | Q / U | V / I | RSN CD | SALE PRICE |
|---|---|---|---|---|---|---|
| 1912/1632 | 4/15/2014 | SW | Q | I | 01 | 134,000 |
| GRANTOR: REGIONS BANK | | | | | | |
| GRANTEE: HERBERT DEBRA M & J | | | | | | |
| 1887/1543 | 11/04/2013 | CT | U | I | 18 | 100 |
| GRANTOR: CLERK OF COURT | | | | | | |
| GRANTEE: REGIONS BANK | | | | | | |

## BUILDING NOTES

## BUILDING DIMENSIONS

BAS=[YR=2005;ORIG=0,0] W18 W14 W10 W7 S40 E12 N3 E10 N5 E6 E19 N2 E2 N30 $
PTO=[YR=2005;ORIG=-18,0] N15 W31 S15 E7 N10 E10 S10 E14 $
FGR=[YR=2005;ORIG=-21,37] S15 E21 N17 N5 W2 S2 W19 S5 $
FSP=[YR=2005;ORIG=-42,0] N10 E10 S10 W10 $
FOP=[YR=2005;ORIG=-27,37] E6 N5 W6 S5 $
STP=[YR=2005;ORIG=0,35] E3 N3 W3 S3 $
.

## EXTRA FEATURES

| LN | OB/XF CODE | DESCRIPTION | BLD | CAP | L | W | UNITS | UT | Adj R | ADJ UNIT PRICE | ORIG COND | YEAR ON | YEAR ACTUAL | Q | % COND | OB/XF MKT VALUE | NOTES |
|---|---|---|---|---|---|---|---|---|---|---|---|---|---|---|---|---|---|
| 1 | 0500 | FP-PRE FAB | 0 | 100 | 0 | 0 | 1.00 | UT | 3,500.00 | 3,500.00 | 100 | 2005 | 2005 | 3 | 89 | 3,115 | |
| 2 | 0811 | CONCRETE B | 0 | 100 | 0 | 0 | 808.00 | SF | 5.20 | 5.20 | 100 | 2005 | 2005 | 3 | 86 | 3,613 | |

## LAND DESCRIPTION

TOTAL OB/XF 6,728

| LN | USE CODE | CLS | LAND USE DESCRIPTION | CAP | RD | LOC ZONE | FRONT | DEPTH | TOT LND UTS | UNIT TYPE | DT | DPTH FACT | % COND | TOT ADJ | UNIT PRICE | ADJ UNIT PRICE | LAND VALUE | OTHER ADJUSTMENTS AND NOTES | YEAR | DENSITY | DECL | FRZ | YR | CONSRV |
|---|---|---|---|---|---|---|---|---|---|---|---|---|---|---|---|---|---|---|---|---|---|---|---|---|
| 1 | 000100 | C | SFR | 100 | 0003 | PUD | 0.00 | 0.00 | 1.00 | LT | | 1.00 | 1.00 | 1.00 | 50,000.00 | 50,000.00 | 50,000 | | | | | | | |

REVIEW DATE 04/11/2024 BY KWA Total Acres: 0.00 Total Land Value: 50,000 Market: 0 Agricultural: 0 Common: 50,000 PRINTED 08/06/2024 BY SYS