LOT 12
IN OR 1397/1925
HUNTERS GREEN REPLAT PB 6/207

GARNER DENNIS & EMMA
54055 PADDOCK COURT
CALLAHAN, FL 32011

2024

09-1N-25-078H-0012-0000

BUILDING CHARACTERISTICS

ELEMENT	CD	CONSTRUCTION
Exterior Wall	20	FACE BRICK 90
Exterior Wall	05	AVERAGE 10
Roof Structur	03	GABLE/HIP 100
Roof Cover	03	COMP SHNGL 100
Interior Wall	05	DRYWALL 100
Interior Floo	14	CARPET 70
Interior Floo	08	SHT VINYL 30
Air Condition	03	CENTRAL 100
Heating Type	04	AIR DUCTED 100
Bedrooms		4 100
Bathrooms		2.5 100
Frame	02	WOOD FRAME 100
Stories	1.5	1.5 100
Units		0 100
Occupancy	00	NONE 100
Quality	03	Quality Level 03
DOR CODE	0100	SINGLE FAMILY
MAP NUM		MKT AREA 08
NEIGHBORHOOD/LOC	8017.00	

AREA TYPE	TOTAL GROSS AREA	PCT OF BASE	TOT ADJ AREA	SUBAREA MARKET VALUE
BAS	2,490	100	2,490	268,005
FGR	652	55	359	38,640
FOP	176	30	53	5,704
FST	24	55	13	1,399
FUS	332	100	332	35,734
PTO	64	5	3	323
PTO	160	5	8	861
TOTALS	3,898		3,258	350,667

MARKET ADJUSTMENTS

TYPE	MDL	EFF. AREA	TOT ADJ PTS	EFF. BASE RATE	REPL. COST NEW	AYB	EYB	ECON	FNCT		NORM	% COND
0900	01	3,258	98.1640	122.70	399,757	2006	2006	0	0	0	12.28	87.72

1 SNGL FAM – 100% - 2007 Heated Area: 2822 HX Base Yr 2007

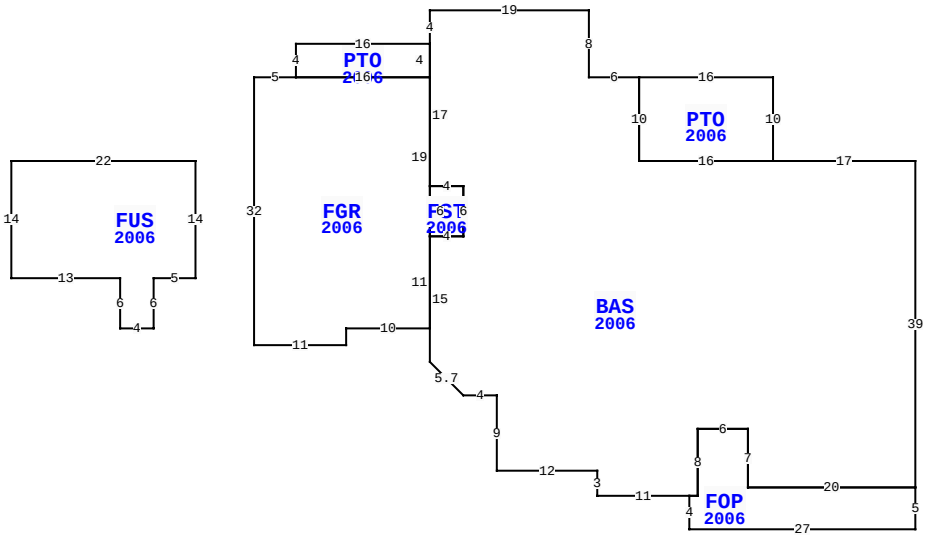

54055 PADDOCK CT, CALLAHAN

BLD DATE	03/29/2007 DJ	LGL DATE	
XF DATE		LAND DATE	
INC DATE		AG DATE	

NASSAU COUNTY PROPERTY

PAGE 1 of 1 6

VALUATION SUMMARY

VALUATION BY		STANDARD
Tax Group: 6	Tax Dist:	
BUILDING MARKET VALUE		350,667
TOTAL MARKET OB/XF VALUE		6,316
TOTAL LAND VALUE - MARKET		60,000
TOTAL MARKET VALUE		416,983
SOH/AGL Deduction		227,905
ASSESSED VALUE		189,078
TOTAL EXEMPTION VALUE	HX HB	50,000
BASE TAXABLE VALUE		139,078
TOTAL JUST VALUE		416,983
NCON VALUE		0
INCOME VALUE		
PREVIOUS YEAR MKT VALUE		402,309

6/2023KW: MISC STRG = NV

PERMIT NUM	DESCRIPTION	AMT	ISSUED
M10592	MECH OTHER	0	11/01/2005
E15987	ELEC OTHER	1,000	10/01/2005
P09861	OTHER	0	08/01/2005
C15700	CO ISSUED	201,094	07/01/2005
B15700	NEW CONSTR	201,094	07/01/2005
R7982	REPAIR/RRF	2,500	07/01/2005

SALES DATA

OFF RECORD Number	DATE	TYPE INST	Q / U	V / I	RSN CD	SALE PRICE
1397/1925	3/22/2006	WD	Q	I		360,000
GRANTOR: KENNETH GREENE CONTRA						
GRANTEE: GARNER DENNIS & EMM						
1328/0259	6/23/2005	WD	U	V	09	800,800
GRANTOR: FORD THOMAS R						
GRANTEE: KENNETH L GREENE CO						

BUILDING NOTES

EXTRA FEATURES

LN	OB/XF CODE	DESCRIPTION	BLD	CAP	L	W	UNITS	UT	Adj R	ADJ UNIT PRICE	ORIG COND	YEAR ON	YEAR ACTUAL	Q	% COND	OB/XF MKT VALUE	NOTES
1	0812	CONCRETE C	0	100	0	0	1,815.00	SF	4.00	4.00	100	2006	2006	3	87	6,316	

BUILDING DIMENSIONS

BAS=[YR=2006;ORIG=0,0] W17 W16 N10 W6 N8 W19 S4 S17 E4 S6 W4 S15 D4R4 E4 S9 E12 S3 E11 E1 N8 E6 S7 E20 N39 $
FGR=[YR=2006;ORIG=-74,-10] W5 S32 E11 N2 E10 N11 N19 W16 $
FUS=[YR=2006;ORIG=-108,0] E22 S14 W5 S6 W4 N6 W13 N14 $
FOP=[YR=2006;ORIG=-27,40] S4 E27 N5 W20 N7 W6 S8 W1 $
PTO=[YR=2006;ORIG=-17,0] N10 W16 S10 E16 $
PTO=[YR=2006;ORIG=-58,-14] W16 S4 E16 N4 $
FST=[YR=2006;ORIG=-58,9] E4 N6 W4 S6 $
.

LAND DESCRIPTION

TOTAL OB/XF 6,316

LN	USE CODE	CLS	LAND USE DESCRIPTION	CAP	RD	LOC ZONE	FRONT	DEPTH	TOT LND UTS	UNIT TYPE	DT	DPTH FACT	% COND	TOT ADJ	UNIT PRICE	ADJ UNIT PRICE	LAND VALUE	OTHER ADJUSTMENTS AND NOTES	YEAR	DENSITY	DECL	FRZ	YR	CONSRV
1	000100	C	SFR	100	0006	OR	0.00	0.00	1.00	LT		1.00	1.00	1.00	60,000.00	60,000.00	60,000							

REVIEW DATE 06/14/2023 BY KWA Total Acres: 0.00 Total Land Value: 60,000 Market: 0 Agricultural: 0 Common: 60,000 PRINTED 08/06/2024 BY SYS