LOT 5
GREEN MEADOWS #2 PB 6/343

DIGIORGI DANIEL W & SHAUNA
44189 GREEN MEADOWS LN
CALLAHAN, FL 32011

2024

09-1N-25-0671-0005-0000

NASSAU COUNTY PROPERTY

BUILDING CHARACTERISTICS

ELEMENT	CD	CONSTRUCTION
Exterior Wall	31	HARDIE BRD 90
Exterior Wall	21	STONE 10
Roof Structur	03	GABLE/HIP 100
Roof Cover	03	COMP SHNGL 100
Interior Wall	05	DRYWALL 100
Interior Floo	13	LVT/LAMNT 70
Interior Floo	14	CARPET 30
Air Condition	03	CENTRAL 100
Heating Type	04	AIR DUCTED 100
Bedrooms		5 100
Bathrooms		3.5 100
Frame	02	WOOD FRAME 100
Stories	2.	2. 100
Units		0 100
Occupancy	00	NONE 100
Quality	02	Quality Level 02
DOR CODE	0100	SINGLE FAMILY
MAP NUM		MKT AREA 08
NEIGHBORHOOD/LOC	8017.00	

AREA TYPE	TOTAL GROSS AREA	PCT OF BASE	TOT ADJ AREA	SUBAREA MARKET VALUE
BAS	2,234	100	2,234	277,092
FGR	552	55	304	37,706
FOP	48	30	14	1,737
FOP	176	30	53	6,574
FST	24	55	13	1,613
FUS	294	100	294	36,466
PTO	150	5	8	992
STR	68	10	7	868
UOP	280	20	56	6,946
TOTALS	3,826		2,983	369,993

MARKET ADJUSTMENTS

TYPE	MDL	EFF. AREA	TOT ADJ PTS	EFF. BASE RATE	REPL. COST NEW	AYB	EYB	ECON	FNCT		NORM	% COND
0900	01	2,983	100.2839	125.35	373,919	2020	2020	0	0	0	1.05	98.95

1 SNGL FAM – 100% - 2022 Heated Area: 2528 HX Base Yr 2022

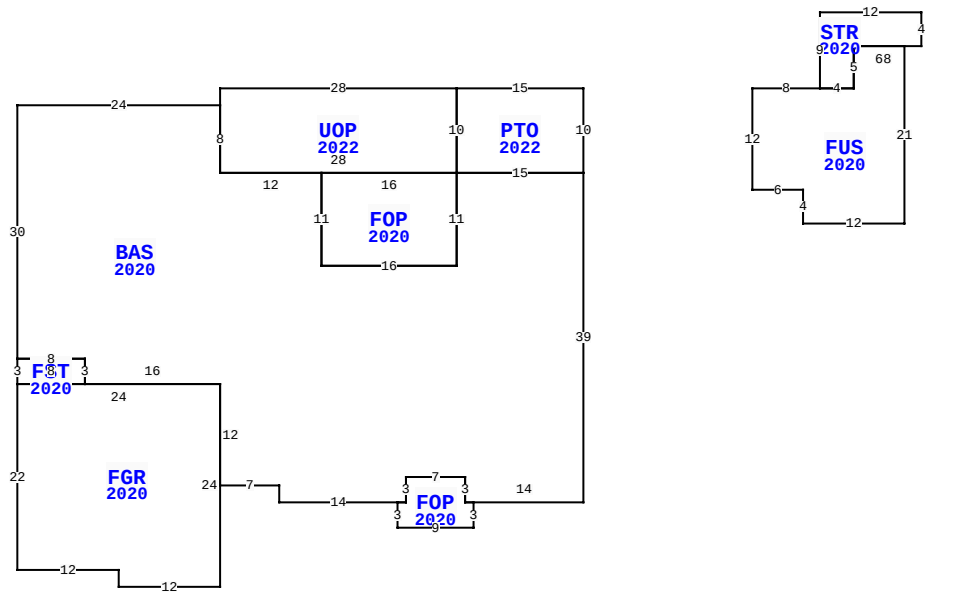

44189 GREEN MEADOWS LN, CALLAHAN

BLD DATE		LGL DATE	
XF DATE		LAND DATE	
INC DATE		AG DATE	

VALUATION SUMMARY

VALUATION BY		STANDARD
Tax Group: 6	Tax Dist:	
BUILDING MARKET VALUE		385,117
TOTAL MARKET OB/XF VALUE		10,320
TOTAL LAND VALUE - MARKET		60,000
TOTAL MARKET VALUE		455,437
SOH/AGL Deduction		34,224
ASSESSED VALUE		421,213
TOTAL EXEMPTION VALUE	HX HB	50,000
BASE TAXABLE VALUE		371,213
TOTAL JUST VALUE		455,437
NCON VALUE		0
INCOME VALUE		
PREVIOUS YEAR MKT VALUE		438,839

PERMIT NUM	DESCRIPTION	AMT	ISSUED
20004718	CO ISSUED	0	01/05/2021
20004860	NEW CONSTR	353,214	06/05/2020

SALES DATA

OFF RECORD Number	DATE	TYPE INST	Q U	V I	RSN CD	SALE PRICE
2298/1204	8/16/2019	WD	Q	V	02	56,000
GRANTOR: ROJAS CARLOS &						
GRANTEE: DIGIORGI DANIEL W &						
1898/1808	1/22/2014	WD	U	V	37	13,000
GRANTOR: HENDRICKS JAMES W						
GRANTEE: ROJAS CARLOS & SONI						

BUILDING NOTES

BUILDING DIMENSIONS

PTO=[YR=2022] W15 UOP=[YR=2022] W28 S2 BAS=[YR=2020] W24 S30 FST=[YR=2020] S3 FGR=[YR=2020] S22E12 S2 E12 N24 W24$ E8 N3 W8$ E8 S3 E16 S12 E7 S2 E14 FOP=[YR=2020] S3 E9 N3 W1 N3 W7 S3 W1$ E1 N3E7 S3 E14 N39 W15 FOP=[YR=2020] W16 S11 E16 N11$ S11 W16 N11 W12 N8$ S8 E28 N10$ S10 E15 N10$ PTR= E20 FUS=[YR=2020] E8 STR=[YR=2020] N9 E12 S4 W8 S5 W4$ E4 N5 E6 S21 W12 N4 W6 N12$ W20$.

EXTRA FEATURES

LN	OB/XF CODE	DESCRIPTION	BLD	CAP	L	W	UNITS	UT	Adj R	ADJ UNIT PRICE	ORIG COND	YEAR ON	YEAR ACTUAL	Q	% COND	OB/XF MKT VALUE	NOTES
1	0812	CONCRETE C	0	100	0	0	2,606.00	SF	4.00	4.00	100	2021	2021	3	99	10,320	

LAND DESCRIPTION

TOTAL OB/XF 10,320

LN	USE CODE	CLS	LAND USE DESCRIPTION	CAP	RD	LOC ZONE	FRONT	DEPTH	TOT LND UTS	UNIT TYPE	DT	DPTH FACT	% COND	TOT ADJ	UNIT PRICE	ADJ UNIT PRICE	LAND VALUE	OTHER ADJUSTMENTS AND NOTES	YEAR	DENSITY	DECL	FRZ	YR	CONSRV
1	000100	C	SFR	100		PUD	0.00	0.00	1.00	LT		1.00	1.00	1.00	60,000.00	60,000.00	60,000							

REVIEW DATE 01/06/2023 BY KWA Total Acres: 0.00 Total Land Value: 60,000 Market: 0 Agricultural: 0 Common: 60,000 PRINTED 08/06/2024 BY SYS

LOT 5
GREEN MEADOWS #2 PB 6/343

DIGIORGI DANIEL W & SHAUNA
44189 GREEN MEADOWS LN
CALLAHAN, FL 32011

2024

09-1N-25-0671-0005-0000

NASSAU COUNTY PROPERTY

BUILDING CHARACTERISTICS

ELEMENT	CD	CONSTRUCTION
Exterior Wall	25	MOD METAL 100
Roof Structur	10	STEEL FRME 100
Roof Cover	12	MODULAR MT 100
Interior Wall	07	NONE 100
Interior Floo	03	CONC FINSH 100
Air Condition	01	NONE 100
Heating Type	01	NONE 100
Bedrooms		0 100
Bathrooms		0 100
Frame	05	STEEL 100
Stories	1.	1. 100
Units		0 100
Occupancy	00	NONE 100
Quality	06	Quality Level 06

DOR CODE	0100	SINGLE FAMILY	
MAP NUM		MKT AREA	08
NEIGHBORHOOD/LOC	8017.00		

AREA TYPE	TOTAL GROSS AREA	PCT OF BASE	TOT ADJ AREA	SUBAREA MARKET VALUE
BAS	600	100	600	13,151
FCP	360	25	90	1,973
TOTALS	960		690	15,124

MARKET ADJUSTMENTS

TYPE	MDL	EFF. AREA	TOT ADJ PTS	EFF. BASE RATE	REPL. COST NEW	AYB	EYB	ECON	FNCT		NORM	% COND
6500	01	690	63.2500	22.14	15,277	2022	2022	0	0	0	1.00	99.00

2 GARAGE RES – 100% - 2022 Heated Area: 600 HX Base Yr 2022

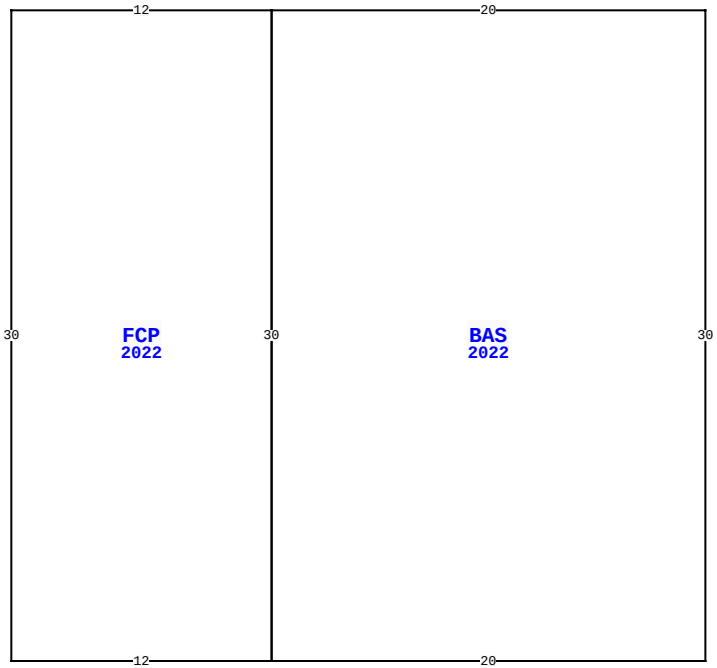

44189 GREEN MEADOWS LN, CALLAHAN

BLD DATE		LGL DATE	
XF DATE		LAND DATE	
INC DATE		AG DATE	

VALUATION SUMMARY

VALUATION BY		STANDARD
Tax Group: 6	Tax Dist:	
BUILDING MARKET VALUE		385,117
TOTAL MARKET OB/XF VALUE		10,320
TOTAL LAND VALUE - MARKET		60,000
TOTAL MARKET VALUE		455,437
SOH/AGL Deduction		34,224
ASSESSED VALUE		421,213
TOTAL EXEMPTION VALUE	HX HB	50,000
BASE TAXABLE VALUE		371,213
TOTAL JUST VALUE		455,437
NCON VALUE		0
INCOME VALUE		
PREVIOUS YEAR MKT VALUE		438,839

PERMIT NUM	DESCRIPTION	AMT	ISSUED

SALES DATA

OFF RECORD Number	DATE	TYPE INST	Q / U	V / I	RSN CD	SALE PRICE
2298/1204	8/16/2019	WD	Q	V	02	56,000
GRANTOR: ROJAS CARLOS &						
GRANTEE: DIGIORGI DANIEL W &						
1898/1808	1/22/2014	WD	U	V	37	13,000
GRANTOR: HENDRICKS JAMES W						
GRANTEE: ROJAS CARLOS & SONI						

BUILDING NOTES

BUILDING DIMENSIONS

BAS=[YR=2022] W20 FCP=[YR=2022] W12 S30 E12 N30$ S30 E20 N30$.

EXTRA FEATURES

L N	OB/XF CODE	DESCRIPTION	BLD	CAP	L	W	UNITS	UT	Adj R	ADJ UNIT PRICE	ORIG COND	YEAR ON	YEAR ACTUAL	Q	% COND	OB/XF MKT VALUE	NOTES

LAND DESCRIPTION

TOTAL OB/XF 0

L N	USE CODE	CLS	LAND USE DESCRIPTION	CAP	R D	LOC ZONE	FRONT	DEPTH	TOT LND UTS	UNIT TYPE	D T	DPTH FACT	% COND	TOT ADJ	UNIT PRICE	ADJ UNIT PRICE	LAND VALUE	OTHER ADJUSTMENTS AND NOTES	YEAR	DENSITY	DECL	FRZ	YR	CONSRV

REVIEW DATE 01/06/2023 BY KWA Total Acres: 0.00 Total Land Value: 60,000 Market: 0 Agricultural: 0 Common: 60,000 PRINTED 08/06/2024 BY SYS