PT OF SW1/4 OF NE1/4
LYING NORTH OF CR 108
IN OR 2415/1624

DRIGGERS DAMON M & LORI A
151450 CR 108
HILLIARD, FL 32046

2024

08-3N-25-0000-0003-0080

NASSAU COUNTY PROPERTY

BUILDING CHARACTERISTICS

ELEMENT	CD	CONSTRUCTION
Exterior Wall	10	ABOVE AVG 90
Exterior Wall	21	STONE 10
Roof Structur	08	IRREGULAR 100
Roof Cover	03	COMP SHNGL 100
Interior Wall	05	DRYWALL 100
Interior Floo	08	SHT VINYL 50
Interior Floo	14	CARPET 50
Air Condition	03	CENTRAL 100
Heating Type	04	AIR DUCTED 100
Bedrooms		3 100
Bathrooms		4.5 100
Frame	02	WOOD FRAME 100
Stories	2.	2. 100
Units		0 100
Occupancy	00	NONE 100
Quality	02	Quality Level 02
DOR CODE	5000	IMPROVED AG
MAP NUM		MKT AREA 05
NEIGHBORHOOD/LOC	5001.00	

AREA TYPE	TOTAL GROSS AREA	PCT OF BASE	TOT ADJ AREA	SUBAREA MARKET VALUE
BAS	2,482	100	2,482	358,764
FCP	576	25	144	20,815
FGR	668	55	367	53,048
FOP	50	30	15	2,168
FOP	168	30	50	7,227
FOP	245	30	74	10,696
FSP	391	40	156	22,549
FUS	364	100	364	52,615
PTO	539	5	27	3,903
STR	56	10	6	867
TOTALS	5,539		3,685	532,653

MARKET ADJUSTMENTS

TYPE	MDL	EFF. AREA	TOT ADJ PTS	EFF. BASE RATE	REPL. COST NEW	AYB	EYB	ECON	FNCT		NORM	% COND
0500	01	3,685	97.3845	146.08	538,305	2020	2020	0	0	0	1.05	98.95

1 SFR CUST – 0% - 0 Heated Area: 2846 HX Base Yr

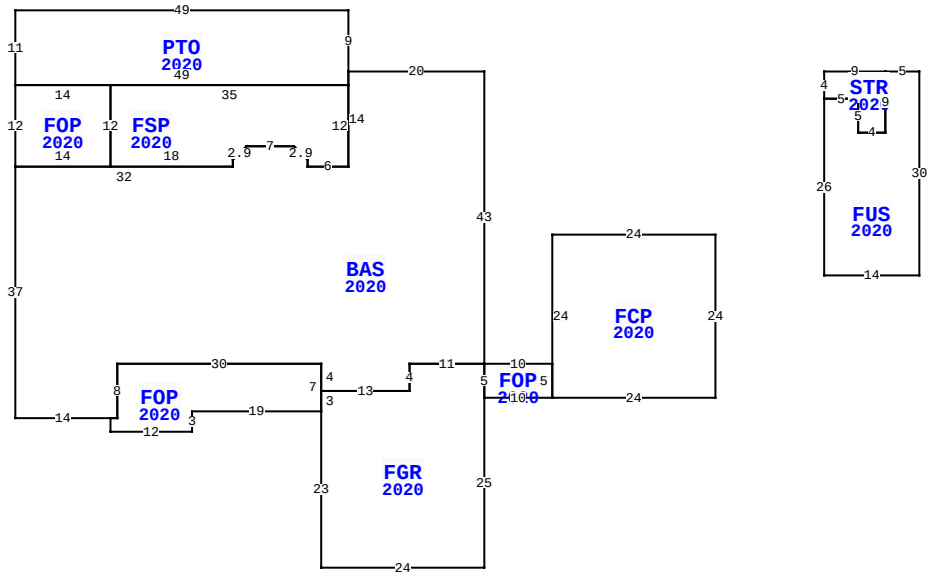

151450 CR 108, HILLIARD

BLD DATE		LGL DATE	
XF DATE		LAND DATE	05/19/2023 MLU
INC DATE		AG DATE	

VALUATION SUMMARY

VALUATION BY	STANDARD
Tax Group: 4	Tax Dist:
BUILDING MARKET VALUE	555,329
TOTAL MARKET OB/XF VALUE	60,055
TOTAL LAND VALUE - MARKET	214,640
TOTAL MARKET VALUE	676,929
SOH/AGL Deduction	115,511
ASSESSED VALUE	561,418
TOTAL EXEMPTION VALUE	0
BASE TAXABLE VALUE	561,418
TOTAL JUST VALUE	830,024
NCON VALUE	0
INCOME VALUE	
PREVIOUS YEAR MKT VALUE	766,069

PERMIT NUM	DESCRIPTION	AMT	ISSUED
20000318	CO ISSUED	0	01/13/2020
19003858	GARAGE	50,679	06/01/2019
19003863	NEW CONSTR	412,260	04/01/2019

SALES DATA

OFF RECORD Number	DATE	TYPE INST	Q / U	V / I	RSN CD	SALE PRICE
2415/1624	12/10/2020	WD	U	I	11	100
GRANTOR: SHEPHERD ALAN D						
GRANTEE: DRIGGERS DAMON M &						
2245/1076	12/14/2018	WD	Q	V	01	130,000
GRANTOR: SHEPHERD ALAN D						
GRANTEE: DRIGGERS DAMON M &						

BUILDING NOTES

BUILDING DIMENSIONS

BAS=[YR=2020] W20 PTO=[YR=2020] N9 W49 S11 FOP=[YR=2020] S12 E14 FSP=[YR=2020] E18 N1 U2 R2 E7 D2 R2 S1 E6 N12 W35 S12$ N12 W14$ E49 N2$ S14 W6 N1 U2 L2 W7 D2 L2 S1 W32 S37 E14 FOP=[YR=2020] S2 E12 N3 E19 FGR=[YR=2020] S23 E24 N25 FOP=[YR=2020] E10 FCP=[YR=2020] E24 N24 W24 S24$ N5 W10 S5$ N5 W11 S4 W13 S3$ N7 W30 S8 W1$ E1 N8 E30 S4 E13 N4 E11 N43$ PTR=E50 STR=[YR=2020] E9 FUS=[YR=2020] E5 S30 W14 N26 E5 S5 E4 N9$ S9 W4 N5 W5 N4$ W50$.

EXTRA FEATURES

LN	OB/XF CODE	DESCRIPTION	BLD	CAP	L	W	UNITS	UT	Adj R	ADJ UNIT PRICE	ORIG COND	YEAR ON	YEAR ACTUAL	Q	% COND	OB/XF MKT VALUE	NOTES
1	0093	MANL GATE	0	0	0	0	1.00	UT	1,200.00	1,200.00	100	2020	2020	3	90	1,080	
2	0461	IRON FENCE	0	0	0	0	100.00	SF	8.50	8.50	100	2020	2020	3	99	842	
3	0500	FP-PRE FAB	0	0	0	0	1.00	UT	3,500.00	3,500.00	100	2020	2020	3	99	3,465	
4	0812	CONCRETE C	0	0	0	0	13,805.00	SF	4.00	4.00	100	2020	2020	3	99	54,668	

LAND DESCRIPTION

TOTAL OB/XF 60,055

LN	USE CODE	CLS	LAND USE DESCRIPTION	CAP	RD	LOC ZONE	FRONT	DEPTH	TOT LND UTS	UNIT TYPE	DT	DPTH FACT	% COND	TOT ADJ	UNIT PRICE	ADJ UNIT PRICE	LAND VALUE	OTHER ADJUSTMENTS AND NOTES	YEAR	DENSITY	DECL	FRZ	YR	CONSRV
1	005000	C	RURAL HOME	0		OR	0.00	0.00	3.00	AC		1.00	1.00	1.00	18,000.00	18,000.00	54,000							
2	005400	A	TIMBER 1 SI	0		OR	0.00	0.00	6.71	AC		1.00	1.00	1.00	730.00	730.00	4,898							
3	005401	A	TIMB2-1 SI	0		OR	0.00	0.00	3.33	AC		1.00	1.00	1.00	795.00	795.00	2,647							
4	009910	M	MKT.VAL.AG	0		OR	0.00	0.00	10.04	AC		1.00	1.00	1.00	16,000.00	16,000.00	160,640							

REVIEW DATE 07/02/2020 BY KB Total Acres: 13.04 Total Land Value: 61,545 Market: 160,640 Agricultural: 7,545 Common: 54,000 PRINTED 08/06/2024 BY SYS

PT OF SW1/4 OF NE1/4
LYING NORTH OF CR 108
IN OR 2415/1624

DRIGGERS DAMON M & LORI A
151450 CR 108
HILLIARD, FL 32046

2024

08-3N-25-0000-0003-0080

NASSAU COUNTY PROPERTY

BUILDING CHARACTERISTICS

ELEMENT	CD	CONSTRUCTION
Exterior Wall	25	MOD METAL 100
Roof Structur	03	GABLE/HIP 100
Roof Cover	12	MODULAR MT 100
Interior Wall	01	MINIMUM 100
Interior Floo	03	CONC FINSH 100
Air Condition	01	NONE 100
Heating Type	01	NONE 100
Bedrooms		0 100
Bathrooms		0 100
Frame	05	STEEL 100
Stories	1.	1. 100
Units		0 100
Occupancy	00	NONE 100
Quality	04	Quality Level 04

DOR CODE 5000 IMPROVED AG
MAP NUM | MKT AREA 05
NEIGHBORHOOD/LOC 5001.00

AREA TYPE	TOTAL GROSS AREA	PCT OF BASE	TOT ADJ AREA	SUBAREA MARKET VALUE
BAS	1,040	100	1,040	22,164
PTO	480	5	24	512
TOTALS	1,520		1,064	22,676

MARKET ADJUSTMENTS

TYPE	MDL	EFF. AREA	TOT ADJ PTS	EFF. BASE RATE	REPL. COST NEW	AYB	EYB	ECON	FNCT		NORM	% COND
6500	01	1,064	63.4410	22.20	23,621	2019	2019	0	0	0	4.00	96.00

2 GARAGE RES – 0% - 0 Heated Area: 1040 HX Base Yr

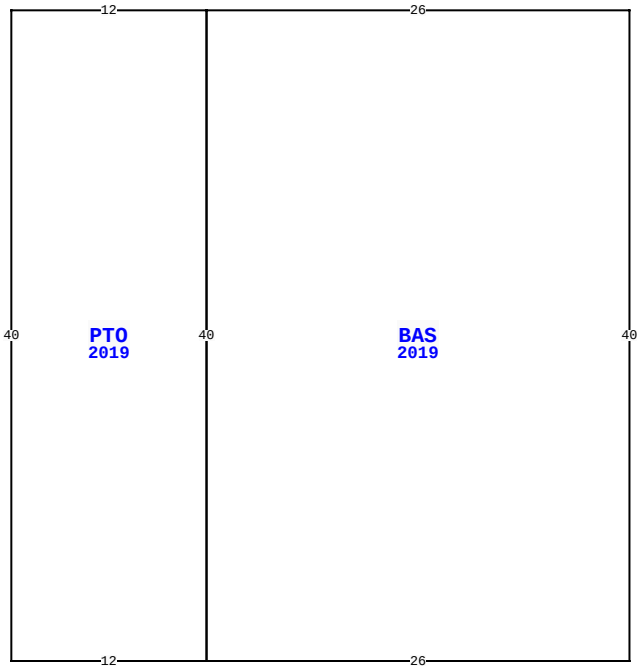

151450 CR 108, HILLIARD

BLD DATE		LGL DATE	
XF DATE		LAND DATE	05/19/2023 MLU
INC DATE		AG DATE	

VALUATION SUMMARY

VALUATION BY	STANDARD
Tax Group: 4	Tax Dist:
BUILDING MARKET VALUE	555,329
TOTAL MARKET OB/XF VALUE	60,055
TOTAL LAND VALUE - MARKET	214,640
TOTAL MARKET VALUE	676,929
SOH/AGL Deduction	115,511
ASSESSED VALUE	561,418
TOTAL EXEMPTION VALUE	0
BASE TAXABLE VALUE	561,418
TOTAL JUST VALUE	830,024
NCON VALUE	0
INCOME VALUE	
PREVIOUS YEAR MKT VALUE	766,069

PERMIT NUM	DESCRIPTION	AMT	ISSUED

SALES DATA

OFF RECORD Number	DATE	TYPE INST	Q U /	V I /	RSN CD	SALE PRICE
2415/1624	12/10/2020	WD	U	I	11	100
GRANTOR: SHEPHERD ALAN D						
GRANTEE: DRIGGERS DAMON M &						
2245/1076	12/14/2018	WD	Q	V	01	130,000
GRANTOR: SHEPHERD ALAN D						
GRANTEE: DRIGGERS DAMON M &						

BUILDING NOTES

BUILDING DIMENSIONS

BAS=[YR=2019] W26 PTO=[YR=2019] W12 S40 E12 N40$ S40 E26 N40$.

EXTRA FEATURES

L N	OB/XF CODE	DESCRIPTION	BLD	CAP	L	W	UNITS	UT	Adj R	ADJ UNIT PRICE	ORIG COND	YEAR ON	YEAR ACTUAL	Q	% COND	OB/XF MKT VALUE	NOTES

LAND DESCRIPTION

TOTAL OB/XF 0

L N	USE CODE	CLS	LAND USE DESCRIPTION	CAP	R D	LOC ZONE	FRONT	DEPTH	TOT LND UTS	UNIT TYPE	D T	DPTH FACT	% COND	TOT ADJ	UNIT PRICE	ADJ UNIT PRICE	LAND VALUE	OTHER ADJUSTMENTS AND NOTES	YEAR	DENSITY	DECL	FRZ	YR	CONSRV

REVIEW DATE 07/02/2020 BY KB Total Acres: 13.04 Total Land Value: 61,545 Market: 160,640 Agricultural: 7,545 Common: 54,000 PRINTED 08/06/2024 BY SYS