BLOCK 169 LOTS 9 THRU 16
PT OR 1473/814
TOWN OF HILLIARD

B Y FRANKLIN PROPERTIES INC
551856 US HWY 1 STE 111
HILLIARD, FL 32046

**2024**

**08-3N-24-2380-0169-0090**

## NASSAU COUNTY PROPERTY



## BUILDING CHARACTERISTICS

| ELEMENT | CD | CONSTRUCTION |
|---|---|---|
| Exterior Wall | 05 | AVERAGE 100 |
| Roof Structur | 03 | GABLE/HIP 100 |
| Roof Cover | 03 | COMP SHNGL 100 |
| Interior Wall | 05 | DRYWALL 100 |
| Interior Floo | 14 | CARPET 90 |
| Interior Floo | 08 | SHT VINYL 10 |
| Air Condition | 03 | CENTRAL 100 |
| Heating Type | 04 | AIR DUCTED 100 |
| Bedrooms | | 3 100 |
| Bathrooms | | 2 100 |
| Frame | 02 | WOOD FRAME 100 |
| Story Height | | 0 100 |
| RMS | | 0 100 |
| Units | | 2 100 |
| Quality | 01 | Quality Level 01 |

| | | | |
|---|---|---|---|
| DOR CODE | 0800 | MULTI-FAMILY | |
| MAP NUM | | MKT AREA | 06 |
| NEIGHBORHOOD/LOC | 6001.00 | | |

| AREA TYPE | TOTAL GROSS AREA | PCT OF BASE | TOT ADJ AREA | SUBAREA MARKET VALUE |
|---|---|---|---|---|
| BAS | 1,480 | 100 | 1,480 | 92,675 |
| FOP | 50 | 30 | 15 | 939 |
| FOP | 50 | 30 | 15 | 939 |
| FOP | 60 | 30 | 18 | 1,127 |
| FOP | 60 | 30 | 18 | 1,127 |
| FUS | 832 | 100 | 832 | 52,098 |
| TOTALS | 2,532 | | 2,378 | 148,905 |

## MARKET ADJUSTMENTS

| TYPE | MDL | EFF. AREA | TOT ADJ PTS | EFF. BASE RATE | REPL. COST NEW | AYB | EYB | ECON | FNCT | | NORM | % COND |
|---|---|---|---|---|---|---|---|---|---|---|---|---|
| 0301 | 03 | 2,378 | 82.5390 | 70.16 | 166,840 | 1996 | 2001 | 0 | 0 | 0 | 10.75 | 89.25 |

1 APARTMENT – 0% - 0 Heated Area: 2312 HX Base Yr

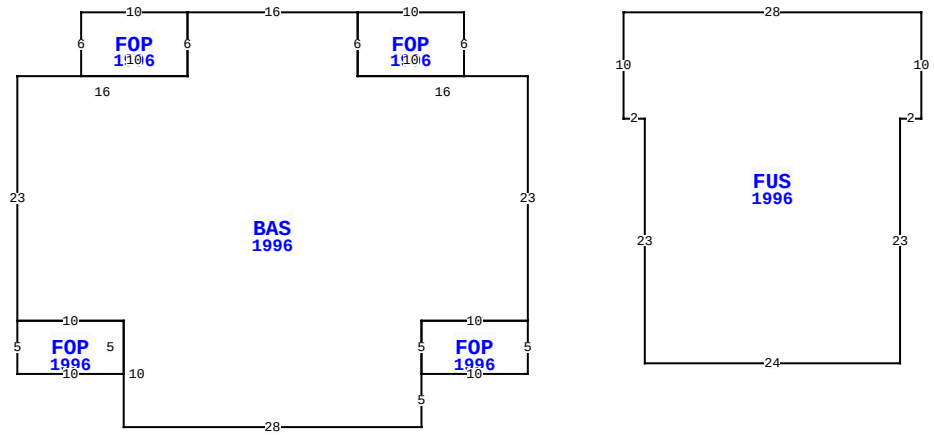


27358 W FIRST AV, HILLIARD

| | | | |
|---|---|---|---|
| BLD DATE | | LGL DATE | |
| XF DATE | | LAND DATE | |
| INC DATE | | AG DATE | |

## VALUATION SUMMARY

| | |
|---|---|
| VALUATION BY | STANDARD |
| Tax Group: 3 | Tax Dist: |
| BUILDING MARKET VALUE | 349,733 |
| TOTAL MARKET OB/XF VALUE | 29,338 |
| TOTAL LAND VALUE - MARKET | 60,000 |
| TOTAL MARKET VALUE | 439,071 |
| SOH/AGL Deduction | 117,850 |
| ASSESSED VALUE | 321,221 |
| TOTAL EXEMPTION VALUE | 0 |
| BASE TAXABLE VALUE | 321,221 |
| TOTAL JUST VALUE | 439,071 |
| NCON VALUE | 0 |
| INCOME VALUE | |
| PREVIOUS YEAR MKT VALUE | 453,889 |

| PERMIT NUM | DESCRIPTION | AMT | ISSUED |
|---|---|---|---|
| 20170176 | REPAIR/RRF | 0 | 09/25/2017 |

## SALES DATA

| OFF RECORD Number | DATE | TYPE INST | Q U / | V I / | RSN CD | SALE PRICE |
|---|---|---|---|---|---|---|
| 1473/0814 | 1/22/2007 | WD | U | I | 01 | 100 |
| GRANTOR: FRANKLIN BOBBY Y | | | | | | |
| GRANTEE: B Y FRANKLIN PROPER | | | | | | |
| 0804/1299 | 8/27/1997 | QC | U | V | 07 | 100 |
| GRANTOR: FRANKLIN BOBBY Y & LA | | | | | | |
| GRANTEE: FRANKLIN BOBBY Y II | | | | | | |

## BUILDING NOTES

## BUILDING DIMENSIONS

FOP=[YR=1996] W10 BAS=[YR=1996] W16 FOP=[YR=1996] W10 S6 E10 N6$ S6 W16 S23 FOP=[YR=1996] S5 E10 N5 W10$ E10 S10E28 N5 FOP=[YR=1996] E10 N5 W10 S5$ N5 E10 N23 W16 N6$ S6 E10 N6$ PTR=E15 FUS=[YR=1996] E28 S10 W2 S23 W24 N23 W2 N10$ W15$.

## EXTRA FEATURES

| L N | OB/XF CODE | DESCRIPTION | BLD | CAP | L | W | UNITS | UT | Adj R | ADJ UNIT PRICE | ORIG COND | YEAR ON | YEAR ACTUAL | Q | % COND | OB/XF MKT VALUE | NOTES |
|---|---|---|---|---|---|---|---|---|---|---|---|---|---|---|---|---|---|
| 1 | 0500 | FP-PRE FAB | 0 | 0 | 0 | 0 | 2.00 | UT | 3,500.00 | 3,500.00 | 100 | 1996 | 1996 | 3 | 79 | 5,530 | |
| 2 | 0812 | CONCRETE C | 0 | 0 | 0 | 0 | 2,559.00 | SF | 4.00 | 4.00 | 100 | 1996 | 1996 | 3 | 72 | 7,370 | |
| 3 | 0500 | FP-PRE FAB | 0 | 0 | 0 | 0 | 4.00 | UT | 3,500.00 | 3,500.00 | 100 | 1997 | 1997 | 3 | 80 | 11,200 | |
| 4 | 0812 | CONCRETE C | 0 | 0 | 0 | 0 | 1,794.00 | SF | 4.00 | 4.00 | 100 | 1997 | 1997 | 3 | 73 | 5,238 | |

## LAND DESCRIPTION

TOTAL OB/XF 29,338

| L N | USE CODE | CLS | LAND USE DESCRIPTION | CAP | R D | LOC ZONE | FRONT | DEPTH | TOT LND UTS | UNIT TYPE | D T | DPTH FACT | % COND | TOT ADJ | UNIT PRICE | ADJ UNIT PRICE | LAND VALUE | OTHER ADJUSTMENTS AND NOTES | YEAR | DENSITY | DECL | FRZ | YR | CONSRV |
|---|---|---|---|---|---|---|---|---|---|---|---|---|---|---|---|---|---|---|---|---|---|---|---|---|
| 1 | 000800 | C | MULTI-FAM | 0 | 0006 | R-3 | 200.00 | 125.00 | 200.00 | FF | | 1.00 | 1.00 | 1.00 | 300.00 | 300.00 | 60,000 | | | | | | | |

REVIEW DATE 04/03/2024 BY KBA Total Acres: 0.00 Total Land Value: 60,000 Market: 0 Agricultural: 0 Common: 60,000 PRINTED 08/06/2024 BY SYS

BLOCK 169 LOTS 9 THRU 16
PT OR 1473/814
TOWN OF HILLIARD

B Y FRANKLIN PROPERTIES INC
551856 US HWY 1 STE 111
HILLIARD, FL 32046

**2024**

**08-3N-24-2380-0169-0090**

## NASSAU COUNTY PROPERTY



## BUILDING CHARACTERISTICS

| ELEMENT | CD | CONSTRUCTION |
|---|---|---|
| Exterior Wall | 05 | AVERAGE 100 |
| Roof Structur | 03 | GABLE/HIP 100 |
| Roof Cover | 03 | COMP SHNGL 100 |
| Interior Wall | 05 | DRYWALL 100 |
| Interior Floo | 14 | CARPET 100 |
| Air Condition | 03 | CENTRAL 100 |
| Heating Type | 04 | AIR DUCTED 100 |
| Bedrooms | | 3 100 |
| Bathrooms | | 2 100 |
| Frame | 02 | WOOD FRAME 100 |
| Story Height | | 0 100 |
| RMS | | 0 100 |
| Units | | 2 100 |
| Quality | 01 | Quality Level 01 |

| | | | |
|---|---|---|---|
| DOR CODE | 0800 | MULTI-FAMILY | |
| MAP NUM | | MKT AREA | 06 |
| NEIGHBORHOOD/LOC | 6001.00 | | |

| AREA TYPE | TOTAL GROSS AREA | PCT OF BASE | TOT ADJ AREA | SUBAREA MARKET VALUE |
|---|---|---|---|---|
| BAS | 1,932 | 100 | 1,932 | 121,098 |
| FOP | 70 | 30 | 21 | 1,316 |
| FOP | 70 | 30 | 21 | 1,316 |
| FOP | 91 | 30 | 27 | 1,692 |
| FOP | 91 | 30 | 27 | 1,692 |
| FUS | 1,176 | 100 | 1,176 | 73,712 |
| TOTALS | 3,430 | | 3,204 | 200,828 |

## MARKET ADJUSTMENTS

| TYPE | MDL | EFF. AREA | TOT ADJ PTS | EFF. BASE RATE | REPL. COST NEW | AYB | EYB | ECON | FNCT | | NORM | % COND |
|---|---|---|---|---|---|---|---|---|---|---|---|---|
| 0301 | 03 | 3,204 | 82.6200 | 70.23 | 225,017 | 1997 | 2001 | 0 | 0 | 0 | 10.75 | 89.25 |

2 APARTMENT – 0% - 0 Heated Area: 3108 HX Base Yr

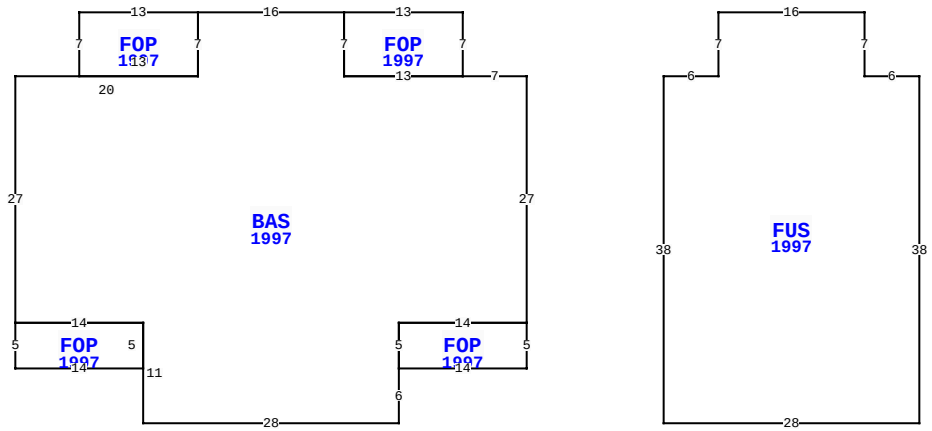


27358 W FIRST AV, HILLIARD

| | | | |
|---|---|---|---|
| BLD DATE | | LGL DATE | |
| XF DATE | | LAND DATE | |
| INC DATE | | AG DATE | |

## VALUATION SUMMARY

| | |
|---|---|
| VALUATION BY | STANDARD |
| Tax Group: 3 | Tax Dist: |
| BUILDING MARKET VALUE | 349,733 |
| TOTAL MARKET OB/XF VALUE | 29,338 |
| TOTAL LAND VALUE - MARKET | 60,000 |
| TOTAL MARKET VALUE | 439,071 |
| SOH/AGL Deduction | 117,850 |
| ASSESSED VALUE | 321,221 |
| TOTAL EXEMPTION VALUE | 0 |
| BASE TAXABLE VALUE | 321,221 |
| TOTAL JUST VALUE | 439,071 |
| NCON VALUE | 0 |
| INCOME VALUE | |
| PREVIOUS YEAR MKT VALUE | 453,889 |

| PERMIT NUM | DESCRIPTION | AMT | ISSUED |
|---|---|---|---|
| | | | |

## SALES DATA

| OFF RECORD Number | DATE | TYPE INST | Q U / | V I / | RSN CD | SALE PRICE |
|---|---|---|---|---|---|---|
| 1473/0814 | 1/22/2007 | WD | U | I | 01 | 100 |
| GRANTOR: FRANKLIN BOBBY Y | | | | | | |
| GRANTEE: B Y FRANKLIN PROPER | | | | | | |
| 0804/1299 | 8/27/1997 | QC | U | V | 07 | 100 |
| GRANTOR: FRANKLIN BOBBY Y & LA | | | | | | |
| GRANTEE: FRANKLIN BOBBY Y II | | | | | | |

## BUILDING NOTES

## BUILDING DIMENSIONS

BAS=[YR=1997] W7 FOP=[YR=1997] N7 W13 S7 E13 $ W13 N7 W16 FOP=[YR=1997] W13 S7 E13 N7 $ S7 W20 S27 FOP=[YR=1997] S5 E14 N5 W14 $ E14 S11 E28 N6 FOP=[YR=1997] E14 N5 W14 S5 $ N5 E14 N27 $ PTR= E15 FUS=[YR=1997] E6 N7 E16 S7 E6 S38 W28 N38 $ W15 $ .

## EXTRA FEATURES

| L N | OB/XF CODE | DESCRIPTION | BLD | CAP | L | W | UNITS | UT | Adj R | ADJ UNIT PRICE | ORIG COND | YEAR ON | YEAR ACTUAL | Q | % COND | OB/XF MKT VALUE | NOTES |
|---|---|---|---|---|---|---|---|---|---|---|---|---|---|---|---|---|---|

## LAND DESCRIPTION

TOTAL OB/XF 0

| L N | USE CODE | CLS | LAND USE DESCRIPTION | CAP | R D | LOC ZONE | FRONT | DEPTH | TOT LND UTS | UNIT TYPE | D T | DPTH FACT | % COND | TOT ADJ | UNIT PRICE | ADJ UNIT PRICE | LAND VALUE | OTHER ADJUSTMENTS AND NOTES | YEAR | DENSITY | DECL | FRZ | YR | CONSRV |
|---|---|---|---|---|---|---|---|---|---|---|---|---|---|---|---|---|---|---|---|---|---|---|---|---|

REVIEW DATE 04/03/2024 BY KBA Total Acres: 0.00 Total Land Value: 60,000 Market: 0 Agricultural: 0 Common: 60,000 PRINTED 08/06/2024 BY SYS