BLOCK 78 LOT 1
TOWN OF HILLIARD

CAMPBELL TIM F & IRIS R
361570 PINE ST
HILLIARD, FL 32046

**2024**

**08-3N-24-2380-0078-0010**

## NASSAU COUNTY PROPERTY



## BUILDING CHARACTERISTICS

| ELEMENT | CD | CONSTRUCTION |
|---|---|---|
| Exterior Wall | 20 | FACE BRICK 100 |
| Roof Structur | 03 | GABLE/HIP 100 |
| Roof Cover | 03 | COMP SHNGL 100 |
| Interior Wall | 05 | DRYWALL 100 |
| Interior Floo | 13 | LVT/LAMNT 70 |
| Interior Floo | 14 | CARPET 30 |
| Air Condition | 03 | CENTRAL 100 |
| Heating Type | 04 | AIR DUCTED 100 |
| Bedrooms | | 3 100 |
| Bathrooms | | 2 100 |
| Frame | 02 | WOOD FRAME 100 |
| Stories | 1. | 1. 100 |
| Units | | 0 100 |
| Occupancy | 00 | NONE 100 |
| Quality | 01 | Quality Level 01 |
| DOR CODE | 0100 | SINGLE FAMILY |
| MAP NUM | | MKT AREA 06 |
| NEIGHBORHOOD/LOC | 6001.00 | |

| AREA TYPE | TOTAL GROSS AREA | PCT OF BASE | TOT ADJ AREA | SUBAREA MARKET VALUE |
|---|---|---|---|---|
| BAS | 1,481 | 100 | 1,481 | 185,867 |
| FGR | 229 | 55 | 126 | 15,814 |
| FOP | 20 | 30 | 6 | 753 |
| PTO | 160 | 5 | 8 | 1,004 |
| UOP | 200 | 20 | 40 | 5,020 |
| TOTALS | 2,090 | | 1,661 | 208,458 |

## MARKET ADJUSTMENTS

| TYPE | MDL | EFF. AREA | TOT ADJ PTS | EFF. BASE RATE | REPL. COST NEW | AYB | EYB | ECON | FNCT | | NORM | % COND |
|---|---|---|---|---|---|---|---|---|---|---|---|---|
| 0900 | 01 | 1,661 | 101.1600 | 126.45 | 210,033 | 2022 | 2022 | 0 | 0 | 0 | 0.75 | 99.25 |

1 SNGL FAM – 100% - 2023 Heated Area: 1481 HX Base Yr 2023

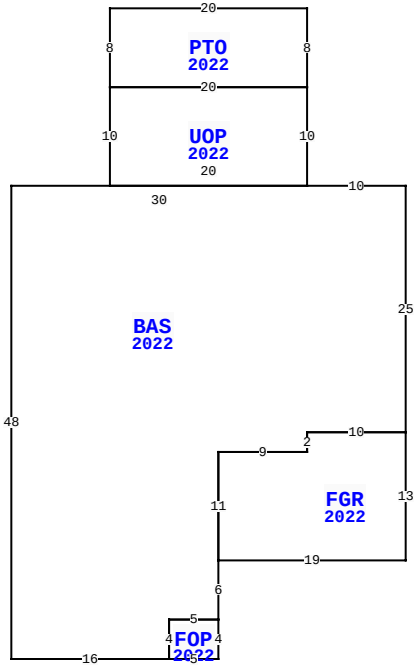


361570 PINE ST, HILLIARD

| | | | |
|---|---|---|---|
| BLD DATE | | LGL DATE | |
| XF DATE | | LAND DATE | |
| INC DATE | | AG DATE | |

## VALUATION SUMMARY

| | | |
|---|---|---|
| VALUATION BY | | STANDARD |
| Tax Group: 3 | Tax Dist: | |
| BUILDING MARKET VALUE | | 208,458 |
| TOTAL MARKET OB/XF VALUE | | 5,732 |
| TOTAL LAND VALUE - MARKET | | 45,000 |
| TOTAL MARKET VALUE | | 259,190 |
| SOH/AGL Deduction | | 1,414 |
| ASSESSED VALUE | | 257,776 |
| TOTAL EXEMPTION VALUE | HX HB | 50,000 |
| BASE TAXABLE VALUE | | 207,776 |
| TOTAL JUST VALUE | | 259,190 |
| NCON VALUE | | 0 |
| INCOME VALUE | | |
| PREVIOUS YEAR MKT VALUE | | 250,268 |

| PERMIT NUM | DESCRIPTION | AMT | ISSUED |
|---|---|---|---|
| 20220083 | NEW CONSTR | 0 | 03/22/2022 |

## SALES DATA

| OFF RECORD Number | DATE | TYPE INST | Q / U | V / I | RSN CD | SALE PRICE |
|---|---|---|---|---|---|---|
| 2407/0222 | 11/09/2020 | WD | Q | V | 01 | 55,000 |
| GRANTOR: MULLINIKS MARION K | | | | | | |
| GRANTEE: CAMPBELL TIM F & IR | | | | | | |
| 2025/0186 | 1/22/2016 | SW | U | I | 30 | 50,000 |
| GRANTOR: MULLINIKS BILLY J | | | | | | |
| GRANTEE: MULLINIKS BILLY J & | | | | | | |

## BUILDING NOTES

## BUILDING DIMENSIONS

BAS=[YR=2022] W10 UOP=[YR=2022] N10 PTO=[YR=2022] N8 W20 S8 E20$ W20 S10 E20$ W30 S48 E16 FOP=[YR=2022] E5 N4 W5 S4$ N4 E5 N6 FGR=[YR=2022] E19 N13 W10 S2 W9 S11$ N11 E9 N2 E10 N25$.

## EXTRA FEATURES

| LN | OB/XF CODE | DESCRIPTION | BLD | CAP | L | W | UNITS | UT | Adj R | ADJ UNIT PRICE | ORIG COND | YEAR ON | YEAR ACTUAL | Q | % COND | OB/XF MKT VALUE | NOTES |
|---|---|---|---|---|---|---|---|---|---|---|---|---|---|---|---|---|---|
| 1 | 0812 | CONCRETE C | 0 | 100 | 0 | 0 | 1,433.00 | SF | 4.00 | 4.00 | 100 | 2022 | 2022 | 3 | 100 | 5,732 | |

## LAND DESCRIPTION

TOTAL OB/XF 5,732

| LN | USE CODE | CLS | LAND USE DESCRIPTION | CAP | RD | LOC ZONE | FRONT | DEPTH | TOT LND UTS | UNIT TYPE | DT | DPTH FACT | % COND | TOT ADJ | UNIT PRICE | ADJ UNIT PRICE | LAND VALUE | OTHER ADJUSTMENTS AND NOTES | YEAR | DENSITY | DECL | FRZ | YR | CONSRV |
|---|---|---|---|---|---|---|---|---|---|---|---|---|---|---|---|---|---|---|---|---|---|---|---|---|
| 1 | 000100 | C | SFR | 100 | 0006 | R-2 | 150.00 | 210.00 | 150.00 | FF | | 1.00 | 1.00 | 1.00 | 300.00 | 300.00 | 45,000 | | | | | | | |

REVIEW DATE 01/18/2023 BY WWX Total Acres: 0.00 Total Land Value: 45,000 Market: 0 Agricultural: 0 Common: 45,000 PRINTED 08/06/2024 BY SYS