BLOCK 13 LOT 2
PT OR 1360/892
ESMT OR 1693/1363

CARTER ROBERT T
37504 POOLE ROAD
HILLIARD, FL 32046

2024

08-3N-24-2380-0013-0020

NASSAU COUNTY PROPERTY

BUILDING CHARACTERISTICS

ELEMENT	CD	CONSTRUCTION
Exterior Wall	05	AVERAGE 100
Roof Structur	04	WOOD TRUSS 100
Roof Cover	03	COMP SHNGL 100
Interior Wall	05	DRYWALL 90
Interior Wall	04	PLYWOOD 10
Interior Floo	12	HARDWOOD 90
Interior Floo	07	CORK/VTILE 10
Air Condition	03	CENTRAL 100
Heating Type	04	AIR DUCTED 100
Bedrooms		0 100
Bathrooms		3 100
Frame	02	WOOD FRAME 100
Stories	2.	2. 100
Units		0 100
BUD8 Adjustme	03	DIST HI 100
Occupancy	00	NONE 100
Quality	03	Quality Level 03
DOR CODE	1200	STORE/OFFICE/RESID
MAP NUM		MKT AREA 06
NEIGHBORHOOD/LOC	6002.00	

AREA TYPE	TOTAL GROSS AREA	PCT OF BASE	TOT ADJ AREA	SUBAREA MARKET VALUE
AOF	1,290	110	1,419	106,978
BAL	135	15	20	1,508
BAS	1,532	100	1,532	115,498
BAS	32	100	32	2,413
CAN	310	30	93	7,011
CAN	175	30	52	3,920
CAN	262	30	79	5,956
DCK	49	10	5	377
DCK	135	10	14	1,056
FOP	16	30	5	377
TOTALS	4,055		3,263	245,997

MARKET ADJUSTMENTS

TYPE	MDL	EFF. AREA	TOT ADJ PTS	EFF. BASE RATE	REPL. COST NEW	AYB	EYB	ECON	FNCT		NORM	% COND
0100	01	3,263	99.8200	94.83	309,430	1926	1970	0	0	0	20.50	79.50

1 SINGLE FAM – 0% - 0 Heated Area: 2854 HX Base Yr

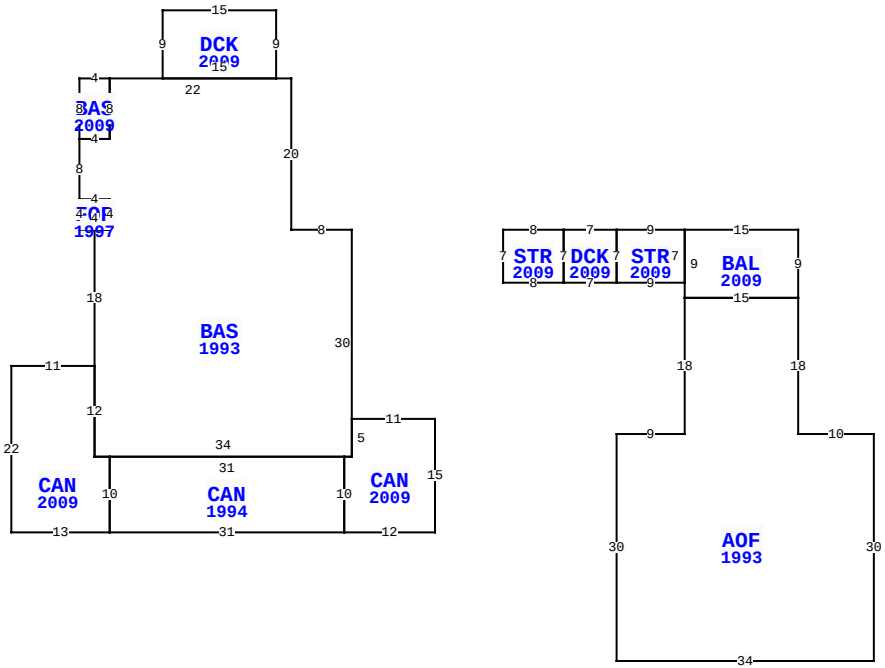

** This building has 12 Sub-Areas

15888 CR 108, HILLIARD

BLD DATE	09/24/2020	KK	LGL DATE		
XF DATE	09/24/2020	KK	LAND DATE	09/24/2020	KK
INC DATE			AG DATE		

VALUATION SUMMARY

VALUATION BY	STANDARD
Tax Group: 3	Tax Dist:
BUILDING MARKET VALUE	337,019
TOTAL MARKET OB/XF VALUE	35,224
TOTAL LAND VALUE - MARKET	132,300
TOTAL MARKET VALUE	504,543
SOH/AGL Deduction	185,213
ASSESSED VALUE	319,330
TOTAL EXEMPTION VALUE	0
BASE TAXABLE VALUE	319,330
TOTAL JUST VALUE	504,543
NCON VALUE	0
INCOME VALUE	
PREVIOUS YEAR MKT VALUE	479,332

PERMIT NUM	DESCRIPTION	AMT	ISSUED
20100096	ELEC OTHER	0	08/19/2010
B0909089	ADDITION	10,000	09/14/2009
B0903041	REMODEL	1,800	04/02/2009
B0901018	REPAIR/RRF	1,500	01/28/2009
	DEMOLITION	11,000	04/06/1989

SALES DATA

OFF RECORD Number	DATE	TYPE INST	Q / U	V / I	RSN CD	SALE PRICE
1360/0892	10/20/2005	WD	Q	I		300,000
GRANTOR: SIMS JESSE A & FRANCE						
GRANTEE: CARTER ROBERT T						
0816/1210	12/15/1997	WD	U	I	07	100
GRANTOR: SLAGLE MORRISON & BET						
GRANTEE: SIMS JESSE & FRANCE						

BUILDING NOTES

BUILDING DIMENSIONS

BAS=[YR=1993] W8 N20 W2 DCK=[YR=2009] N9 W15 S9 E15$ W22 BAS=[YR=2009] W4 S8 E4 N8$ S8 W4 S8 FOP=[YR=1997] S4 E4 N4 W4 $ E4 S4 W2S18 CAN=[YR=2009] W11 S22 E13 CAN=[YR=1994] E31 CAN=[YR=2009] E12 N15 W11 S5 W1 S10 $ N10 W31 S10 $ N10 W2 N12 $ S12 E34 N30 $ PTR= E20 STR=[YR=2009] E8 DCK=[YR=2009] E7 STR=[YR=2009] E9 BAL=[YR=2009] E15 S9 AOF=[YR=1993] S18 E10 S30 W34 N30 E9 N18 E15$ W15 N9$ S7 W9 N7$ S7 W7 N7$ S7 W8 N7$ W20 $.

EXTRA FEATURES

LN	OB/XF CODE	DESCRIPTION	BLD	CAP	L	W	UNITS	UT	Adj R	ADJ UNIT PRICE	ORIG COND	YEAR ON	YEAR ACTUAL	Q	% COND	OB/XF MKT VALUE	NOTES
1	0500	FP-PRE FAB	0	0	0	0	2.00	UT	3,500.00	3,500.00	100	1926	1926	3	20	1,400	
2	0525	GAZEBO	0	0	0	0	1.00	UT	20,000.00	20,000.00	100	2009	2009	3	56	11,200	
3	1075	TRELLIS G	0	0	0	0	409.00	SF	17.50	17.50	100	2009	2009	3	56	4,008	
4	0446	BOX FNC 6'	0	0	0	0	268.00	LF	20.00	20.00	100	2009	2009	3	40	2,144	
5	0811	CONCRETE B	0	0	0	0	1,381.00	SF	5.20	5.20	100	2009	2009	3	90	6,463	
6	0855	CONC PAVER	0	0	0	0	1,033.00	SF	10.00	10.00	100	2010	2010	3	91	9,400	
7	1076	TRELLIS A	0	0	8	6	48.00	SF	7.50	7.50	100	2010	2010	3	60	216	
8	0810	CONCRETE A	0	0	6	4	24.00	SF	6.50	6.50	100	1980	1980	3	32.5	51	
9	0978	SECURTY LT	0	0	0	0	2.00	UT	225.00	225.00	100	2009	2009	3	76	342	

LAND DESCRIPTION

TOTAL OB/XF 35,224

LN	USE CODE	CLS	LAND USE DESCRIPTION	CAP	RD	LOC ZONE	FRONT	DEPTH	TOT LND UTS	UNIT TYPE	DT	DPTH FACT	% COND	TOT ADJ	UNIT PRICE	ADJ UNIT PRICE	LAND VALUE	OTHER ADJUSTMENTS AND NOTES	YEAR	DENSITY	DECL	FRZ	YR	CONSRV
1	001200	C	STORE COMB	0	0006	C-1	-210.00	210.00	44,100.00	SF		1.00	1.00	1.00	3.00	3.00	132,300							

REVIEW DATE 09/24/2020 BY KK Total Acres: 0.00 Total Land Value: 132,300 Market: 0 Agricultural: 0 Common: 132,300 PRINTED 08/06/2024 BY SYS

BLOCK 13 LOT 2
PT OR 1360/892
ESMT OR 1693/1363

CARTER ROBERT T
37504 POOLE ROAD
HILLIARD, FL 32046

2024

08-3N-24-2380-0013-0020

BUILDING CHARACTERISTICS

ELEMENT	CD	CONSTRUCTION
Exterior Wall	25	MOD METAL 60
Exterior Wall	05	AVERAGE 40
Roof Structur	04	WOOD TRUSS 100
Roof Cover	12	MODULAR MT 100
Interior Wall	02	WALL BD/WD 100
Interior Floo	03	CONC FINSH 100
Ceiling	04	NONE 100
Air Condition	01	NONE 100
Heating Type	03	FORCED AIR 100
Fixtures		0 100
Frame	02	WOOD FRAME 100
Story Height		9 100
RMS		1 100
Stories	1.	1. 100
Units		0 100
Occupancy	00	NONE 100
Quality	01	Quality Level 01
DOR CODE	1200	STORE/OFFICE/RESID
MAP NUM		MKT AREA 06
NEIGHBORHOOD/LOC	6002.00	

AREA TYPE	TOTAL GROSS AREA	PCT OF BASE	TOT ADJ AREA	SUBAREA MARKET VALUE
BAS	1,423	100	1,423	54,883
BAS	686	100	686	26,458
BAS	96	100	96	3,702
CAN	518	30	155	5,978
TOTALS	2,723		2,360	91,022

MARKET ADJUSTMENTS

TYPE	MDL	EFF. AREA	TOT ADJ PTS	EFF. BASE RATE	REPL. COST NEW	AYB	EYB	ECON	FNCT		NORM	% COND
0303	04	2,360	43.0636	46.19	109,008	1989	1989	0	0	0	16.50	83.50

3 CLUB HOUSE – 0% - 0 Heated Area: 2205 HX Base Yr

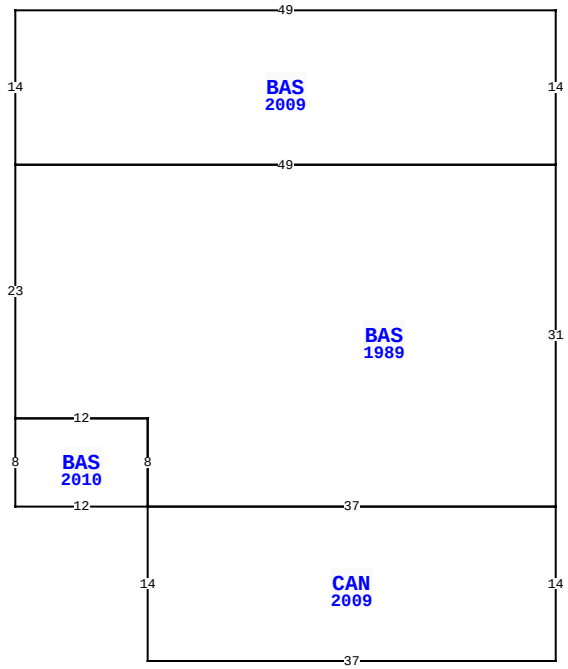

15888 CR 108, HILLIARD

BLD DATE	09/24/2020	KK	LGL DATE	
XF DATE	09/24/2020	KK	LAND DATE	09/24/2020 KK
INC DATE			AG DATE	

NASSAU COUNTY PROPERTY

PAGE 2 of 2 3

VALUATION SUMMARY

VALUATION BY	STANDARD
Tax Group: 3	Tax Dist:
BUILDING MARKET VALUE	337,019
TOTAL MARKET OB/XF VALUE	35,224
TOTAL LAND VALUE - MARKET	132,300
TOTAL MARKET VALUE	504,543
SOH/AGL Deduction	185,213
ASSESSED VALUE	319,330
TOTAL EXEMPTION VALUE	0
BASE TAXABLE VALUE	319,330
TOTAL JUST VALUE	504,543
NCON VALUE	0
INCOME VALUE	
PREVIOUS YEAR MKT VALUE	479,332

PERMIT NUM	DESCRIPTION	AMT	ISSUED

SALES DATA

OFF RECORD Number	DATE	TYPE INST	Q / U	V / I	RSN CD	SALE PRICE
1360/0892	10/20/2005	WD	Q	I		300,000
GRANTOR: SIMS JESSE A & FRANCE						
GRANTEE: CARTER ROBERT T						
0816/1210	12/15/1997	WD	U	I	07	100
GRANTOR: SLAGLE MORRISON & BET						
GRANTEE: SIMS JESSE & FRANCE						

BUILDING NOTES

BUILDING DIMENSIONS

BAS=[YR=2009] W49 S14 BAS=[YR=1989] S23 BAS=[YR=2010] S8 E12 N8 W12$ E12 S8 CAN=[YR=2009] S14 E37 N14 W37$ E37 N31 W49$ E49 N14$.

EXTRA FEATURES

L N	OB/XF CODE	DESCRIPTION	BLD	CAP	L	W	UNITS	UT	Adj R	ADJ UNIT PRICE	ORIG COND	YEAR ON	YEAR ACTUAL	Q	% COND	OB/XF MKT VALUE	NOTES

LAND DESCRIPTION

TOTAL OB/XF 0

L N	USE CODE	CLS	LAND USE DESCRIPTION	CAP	R D	LOC ZONE	FRONT	DEPTH	TOT LND UTS	UNIT TYPE	D T	DPTH FACT	% COND	TOT ADJ	UNIT PRICE	ADJ UNIT PRICE	LAND VALUE	OTHER ADJUSTMENTS AND NOTES	YEAR	DENSITY	DECL	FRZ	YR	CONSRV

REVIEW DATE 09/24/2020 BY KK Total Acres: 0.00 Total Land Value: 132,300 Market: 0 Agricultural: 0 Common: 132,300 PRINTED 08/06/2024 BY SYS