LOT 87
NASSAU STATION OR 2425/1321

KENNEDY SEAN B
6550 SOUTH LA DONNA LN
HEREFORD, AZ 85615

2024

08-2N-27-0215-0087-0000

NASSAU COUNTY PROPERTY

BUILDING CHARACTERISTICS

ELEMENT	CD	CONSTRUCTION
Exterior Wall	31	HARDIE BRD 100
Roof Structur	03	GABLE/HIP 100
Roof Cover	03	COMP SHNGL 100
Interior Wall	05	DRYWALL 100
Interior Floo	11	CLAY TILE 60
Interior Floo	14	CARPET 40
Air Condition	03	CENTRAL 100
Heating Type	04	AIR DUCTED 100
Bedrooms		2 100
Bathrooms		2.5 100
Frame	02	WOOD FRAME 100
Stories	2.	2. 100
Units		0 100
Occupancy	00	NONE 100
Quality	03	Quality Level 03

DOR CODE 0100 SINGLE FAMILY
MAP NUM | MKT AREA 04
NEIGHBORHOOD/LOC 4093.00

AREA TYPE	TOTAL GROSS AREA	PCT OF BASE	TOT ADJ AREA	SUBAREA MARKET VALUE
BAS	532	100	532	63,177
FGR	280	55	154	18,288
FOP	36	30	11	1,306
FOP	72	30	22	2,613
FUS	636	100	636	75,527
STR	48	10	5	594
TOTALS	1,604		1,360	161,504

MARKET ADJUSTMENTS

TYPE	MDL	EFF. AREA	TOT ADJ PTS	EFF. BASE RATE	REPL. COST NEW	AYB	EYB	ECON	FNCT		NORM	% COND
0320	01	1,360	125.6320	119.35	162,316	2021	2021	0	0	0	0.50	99.50

1 TOWNHOUSE - 100% - 2022 Heated Area: 1168 HX Base Yr 2022

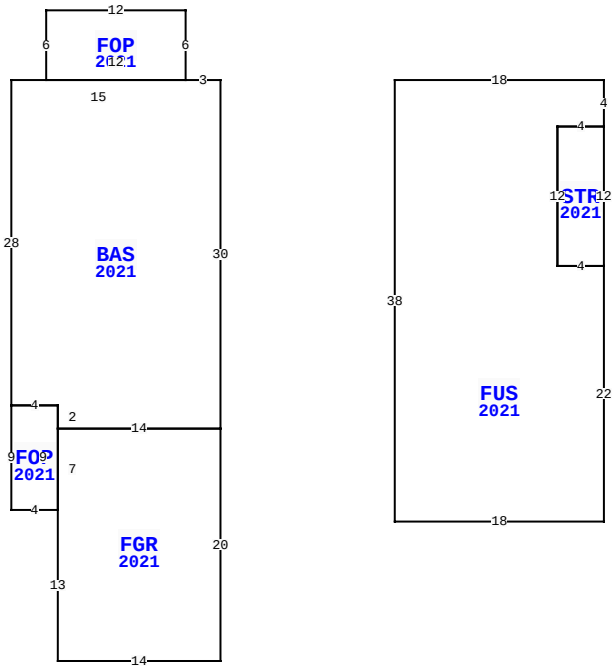

75530 HARVESTER ST, YULEE

BLD DATE		LGL DATE	
XF DATE		LAND DATE	
INC DATE		AG DATE	

VALUATION SUMMARY

VALUATION BY		STANDARD
Tax Group: 4	Tax Dist:	
BUILDING MARKET VALUE		161,504
TOTAL MARKET OB/XF VALUE		2,580
TOTAL LAND VALUE - MARKET		40,000
TOTAL MARKET VALUE		204,084
SOH/AGL Deduction		15,003
ASSESSED VALUE		189,081
TOTAL EXEMPTION VALUE	HX HB	50,000
BASE TAXABLE VALUE		139,081
TOTAL JUST VALUE		204,084
NCON VALUE		0
INCOME VALUE		
PREVIOUS YEAR MKT VALUE		204,923

PERMIT NUM	DESCRIPTION	AMT	ISSUED
210000	NEW CONSTR	158,000	03/01/2021

SALES DATA

OFF RECORD Number	DATE	TYPE INST	Q U	V I	RSN CD	SALE PRICE
2524/1459	12/22/2021	SW	Q	I	01	224,000
GRANTOR: D R HORTON INC-JACKSO						
GRANTEE: KENNEDY SEAN B						
2440/0368	3/04/2021	WD	Q	V	05	450,800
GRANTOR: PATRIOT RIDGE LLP						
GRANTEE: D R HORTON INC-JACK						

BUILDING NOTES

BUILDING DIMENSIONS

BAS=[YR=2021] W3 FOP=[YR=2021] N6 W12 S6 E12$ W15 S28 FOP=[YR=2021] S9 E4 FGR=[YR=2021] S13 E14 N20 W14 S7$ N9 W4$ E4 S2 E14 N30$ PTR=E15 FUS=[YR=2021] E18 S4 STR=[YR=2021] S12 W4 N12 E4$ W4 S12 E4 S22 W18 N38$ W15$.

EXTRA FEATURES

LN	OB/XF CODE	DESCRIPTION	BLD	CAP	L	W	UNITS	UT	Adj R	ADJ UNIT PRICE	ORIG COND	YEAR ON	YEAR ACTUAL	Q	% COND	OB/XF MKT VALUE	NOTES
1	0810	CONCRETE A	0	100	0	0	401.00	SF	6.50	6.50	100	2021	2021	3	99	2,580	

LAND DESCRIPTION

TOTAL OB/XF 2,580

LN	USE CODE	CLS	LAND USE DESCRIPTION	CAP	RD	LOC ZONE	FRONT	DEPTH	TOT LND UTS	UNIT TYPE	DT	DPTH FACT	% COND	TOT ADJ	UNIT PRICE	ADJ UNIT PRICE	LAND VALUE	OTHER ADJUSTMENTS AND NOTES	YEAR	DENSITY	DECL	FRZ	YR	CONSRV
1	000310	C	TOWNHOUSE2	100		PUD	0.00	0.00	1.00	LT		1.00	1.00	1.00	40,000.00	40,000.00	40,000							

REVIEW DATE 12/09/2021 BY NW Total Acres: 0.00 Total Land Value: 40,000 Market: 0 Agricultural: 0 Common: 40,000 PRINTED 08/06/2024 BY SYS