LOT 85
NASSAU STATION OR 2425/1321

75510 HARVESTER STREET TRUST/HARVESTER HOMES LLC T
8288 ROARING SPRINGS RD
GLOUCHESTER, VA 23061

2024

08-2N-27-0215-0085-0000

BUILDING CHARACTERISTICS

ELEMENT	CD	CONSTRUCTION
Exterior Wall	31	HARDIE BRD 100
Roof Structur	03	GABLE/HIP 100
Roof Cover	03	COMP SHNGL 100
Interior Wall	05	DRYWALL 100
Interior Floo	11	CLAY TILE 60
Interior Floo	14	CARPET 40
Air Condition	03	CENTRAL 100
Heating Type	04	AIR DUCTED 100
Bedrooms		3 100
Bathrooms		2.5 100
Frame	02	WOOD FRAME 100
Stories	2.	2. 100
Units		0 100
Occupancy	00	NONE 100
Quality	03	Quality Level 03
DOR CODE	0100	SINGLE FAMILY
MAP NUM		MKT AREA 04
NEIGHBORHOOD/LOC	4093.00	

AREA TYPE	TOTAL GROSS AREA	PCT OF BASE	TOT ADJ AREA	SUBAREA MARKET VALUE
BAS	532	100	532	61,965
FGR	280	55	154	17,937
FOP	36	30	11	1,282
FOP	72	30	22	2,562
FUS	800	100	800	93,180
STR	48	10	5	582
TOTALS	1,768		1,524	177,507

MARKET ADJUSTMENTS

TYPE	MDL	EFF. AREA	TOT ADJ PTS	EFF. BASE RATE	REPL. COST NEW	AYB	EYB	ECON	FNCT		NORM	% COND
0320	01	1,524	123.2160	117.06	178,399	2021	2021	0	0	0	0.50	99.50

1 TOWNHOUSE – 100% - 2022 Heated Area: 1332 HX Base Yr 2022

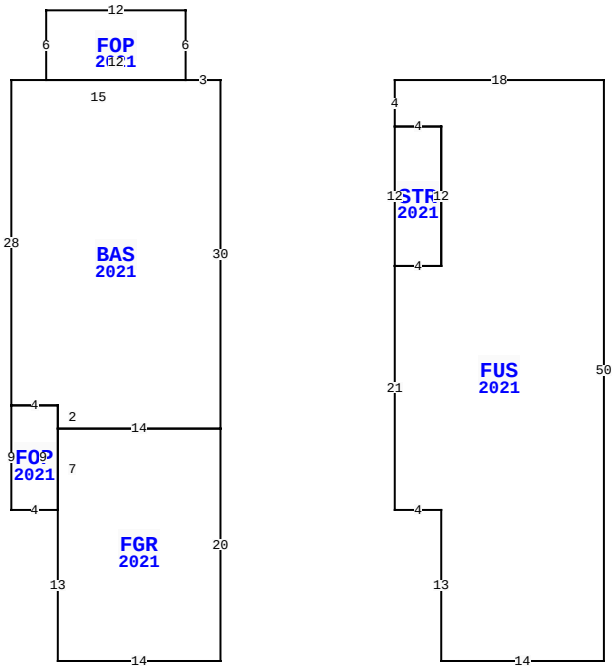

BLD DATE	
XF DATE	
INC DATE	
LGL DATE	
LAND DATE	
AG DATE	

75510 HARVESTER ST, YULEE

NASSAU COUNTY PROPERTY

PAGE 1 of 1 4

VALUATION SUMMARY

VALUATION BY		STANDARD
Tax Group: 4	Tax Dist:	
BUILDING MARKET VALUE		177,507
TOTAL MARKET OB/XF VALUE		2,580
TOTAL LAND VALUE - MARKET		40,000
TOTAL MARKET VALUE		220,087
SOH/AGL Deduction		15,744
ASSESSED VALUE		204,343
TOTAL EXEMPTION VALUE	HX HB	50,000
BASE TAXABLE VALUE		154,343
TOTAL JUST VALUE		220,087
NCON VALUE		0
INCOME VALUE		
PREVIOUS YEAR MKT VALUE		221,006

PERMIT NUM	DESCRIPTION	AMT	ISSUED
210000	NEW CONSTR	180,000	03/01/2021

SALES DATA

OFF RECORD Number	DATE	TYPE INST	Q U /	V I /	RSN CD	SALE PRICE
2652/1714	5/19/2023	QC	U	I	11	100
GRANTOR: HYDRUSKO MATTHEW T &						
GRANTEE: 75510 HARVESTER STR						
2523/1519	12/21/2021	SW	Q	I	01	252,000
GRANTOR: D R HORTON INC-JACKSO						
GRANTEE: HYDRUSKO MATTHEW TH						

BUILDING NOTES

BUILDING DIMENSIONS

BAS=[YR=2021] W3 FOP=[YR=2021] N6 W12 S6 E12$ W15 S28
FOP=[YR=2021] S9 E4 FGR=[YR=2021] S13 E14 N20 W14 S7$ N9 W4$
E4 S2 E14 N30$ PTR=E15 FUS=[YR=2021] E18 S50 W14 N13 W4 N21
STR2 021=N12 E4 S12 W4$ E4 N12 W4 N4$ W15$.

EXTRA FEATURES

LN	OB/XF CODE	DESCRIPTION	BLD	CAP	L	W	UNITS	UT	Adj R	ADJ UNIT PRICE	ORIG COND	YEAR ON	YEAR ACTUAL	Q	% COND	OB/XF MKT VALUE	NOTES
1	0810	CONCRETE A	0	100	0	0	401.00	SF	6.50	6.50	100	2021	2021	3	99	2,580	

LAND DESCRIPTION

TOTAL OB/XF 2,580

LN	USE CODE	CLS	LAND USE DESCRIPTION	CAP	RD	LOC ZONE	FRONT	DEPTH	TOT LND UTS	UNIT TYPE	DT	DPTH FACT	% COND	TOT ADJ	UNIT PRICE	ADJ UNIT PRICE	LAND VALUE	OTHER ADJUSTMENTS AND NOTES	YEAR	DENSITY	DECL	FRZ	YR	CONSRV
1	000310	C	TOWNHOUSE2	100		PUD	0.00	0.00	1.00	LT		1.00	1.00	1.00	40,000.00	40,000.00	40,000							

REVIEW DATE 12/09/2021 BY NW Total Acres: 0.00 Total Land Value: 40,000 Market: 0 Agricultural: 0 Common: 40,000 PRINTED 08/06/2024 BY SYS