LOT 14 (EX S-1 & S-3)
PT OR 1227/677
F/K/A 05-4N-24-0000-0010-0010

PIKE THOMAS B SR & SHARON E
39602 PROSPECT LANDING ROAD
HILLIARD, FL 32046-5729

2024

05-4N-24-1630-0014-0000

NASSAU COUNTY PROPERTY

BUILDING CHARACTERISTICS

ELEMENT	CD	CONSTRUCTION
Exterior Wall	20	FACE BRICK 90
Exterior Wall	05	AVERAGE 10
Roof Structur	03	GABLE/HIP 100
Roof Cover	03	COMP SHNGL 100
Interior Wall	05	DRYWALL 100
Interior Floo	12	HARDWOOD 50
Interior Floo	14	CARPET 50
Air Condition	03	CENTRAL 100
Heating Type	04	AIR DUCTED 100
Bedrooms		3 100
Bathrooms		2.5 100
Frame	02	WOOD FRAME 100
Stories	1.	1. 100
Units		0 100
Occupancy	00	NONE 100
Quality	04	Quality Level 04
DOR CODE	5000	IMPROVED AG
MAP NUM		MKT AREA 09
NEIGHBORHOOD/LOC	9001.00	

AREA TYPE	TOTAL GROSS AREA	PCT OF BASE	TOT ADJ AREA	SUBAREA MARKET VALUE
BAS	2,699	100	2,699	296,170
FGR	550	55	302	33,139
FOP	114	30	34	3,731
FOP	282	30	85	9,327
FST	20	55	11	1,207
PTO	192	5	10	1,097
STP	18	10	2	219
UDG	1,575	55	866	95,029
UOP	192	20	38	4,170
TOTALS	5,642		4,047	444,090

MARKET ADJUSTMENTS

TYPE	MDL	EFF. AREA	TOT ADJ PTS	EFF. BASE RATE	REPL. COST NEW	AYB	EYB	ECON	FNCT		NORM	% COND
0900	01	4,047	100.9008	126.13	510,448	2005	2005	0	0	0	13.00	87.00

1 SNGL FAM – 100% - 2006 Heated Area: 2699 HX Base Yr 2006

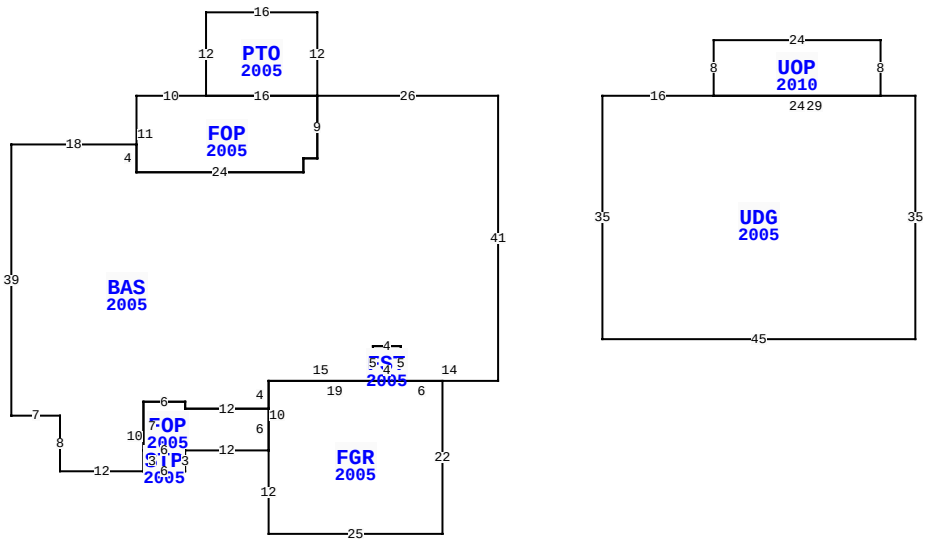

39602 PROSPECT LANDING RD, HILLIARD

BLD DATE		LGL DATE	
XF DATE		LAND DATE	06/13/2023 MLU
INC DATE		AG DATE	

VALUATION SUMMARY

VALUATION BY		STANDARD
Tax Group: 4	Tax Dist:	
BUILDING MARKET VALUE		444,090
TOTAL MARKET OB/XF VALUE		17,586
TOTAL LAND VALUE - MARKET		195,450
TOTAL MARKET VALUE		496,253
SOH/AGL Deduction		261,552
ASSESSED VALUE		234,701
TOTAL EXEMPTION VALUE	HX HB	50,000
BASE TAXABLE VALUE		184,701
TOTAL JUST VALUE		657,126
NCON VALUE		0
INCOME VALUE		
PREVIOUS YEAR MKT VALUE		638,573

PERMIT NUM	DESCRIPTION	AMT	ISSUED
M10417	MECH OTHER	0	10/01/2005
R07957	REPAIR/RRF	6,000	07/01/2005
M09346	MECH OTHER	0	02/01/2005
P0408854	OTHER	0	12/01/2004

SALES DATA

OFF RECORD Number	DATE	TYPE INST	Q U	V I	RSN CD	SALE PRICE
1227/0677	5/03/2004	WD	U	V	09	294,000
GRANTOR: FORBESS THOMAS JR & P						
GRANTEE: PIKE THOMAS B SR &						
0782/1895	1/22/1997	WD	U	I	09	175,000
GRANTOR: HARRIS MITCHELL						
GRANTEE: FORBESS THOMAS JR &						

BUILDING NOTES

BUILDING DIMENSIONS

BAS=[YR=2005] W26 PTO=[YR=2005] N12 W16 S12 FOP=[YR=2005] W10 S11 E24 N2 E2 N9 W16$ E16$S9 W2 S2 W24 N4 W18 S39 E7 S8 E12 STP=[YR=2005] E6 N3 FOP=[YR=2005] E12 FGR=[YR=2005] S12 E25 N22 W6 FST=[YR=2005] N5 W4 S5 E4 $ W19 S10 $ N6 W12 N1 W6 S7 E6$ W6 S3$ N10 E6 S1 E12 N4 E15 N5 E4 S5 E14 N41 $ PTR= E15 UDG=[YR=2005] E16 UOP=[YR=2010] N8 E24 S8 W24$ E29 S35 W45 N35 $ W15 $.

EXTRA FEATURES

LN	OB/XF CODE	DESCRIPTION	BLD	CAP	L	W	UNITS	UT	Adj R	ADJ UNIT PRICE	ORIG COND	YEAR ON	YEAR ACTUAL	Q	% COND	OB/XF MKT VALUE	NOTES
1	0812	CONCRETE C	0	100	85	30	2,550.00	SF	4.00	4.00	100	1960	1960	3	20	2,040	
2	1127	BRICK 8"	0	100	0	0	42.00	SF	5.50	5.50	100	2005	2005	3	96	222	
3	0504	FP-ELECTRI	0	100	0	0	1.00	UT	2,000.00	2,000.00	100	2005	2005	3	89	1,780	
4	0812	CONCRETE C	0	100	0	0	3,791.00	SF	4.00	4.00	100	2005	2005	3	86	13,041	
5	0461	IRON FENCE	0	100	0	0	63.00	SF	8.50	8.50	100	2010	2010	3	94	503	

LAND DESCRIPTION

TOTAL OB/XF 17,586

LN	USE CODE	CLS	LAND USE DESCRIPTION	CAP	RD	LOC ZONE	FRONT	DEPTH	TOT LND UTS	UNIT TYPE	DT	DPTH FACT	% COND	TOT ADJ	UNIT PRICE	ADJ UNIT PRICE	LAND VALUE	OTHER ADJUSTMENTS AND NOTES	YEAR	DENSITY	DECL	FRZ	YR	CONSRV
1	005000	C	RURAL HOME	100	0005	OR	0.00	0.00	1.00	AC		1.00	1.00	1.00	30,000.00	30,000.00	30,000							
2	005600	A	TIMBER 3 SI	0		OR	0.00	0.00	11.03	AC		1.00	1.00	1.00	415.00	415.00	4,577							
3	009910	M	MKT.VAL.AG	0		OR	0.00	0.00	11.03	AC		1.00	1.00	1.00	15,000.00	15,000.00	165,450							

REVIEW DATE 01/14/2021 BY WWA Total Acres: 12.03 Total Land Value: 34,577 Market: 165,450 Agricultural: 4,577 Common: 30,000 PRINTED 08/06/2024 BY SYS