IN OR 84 PG 353 &
IN OR 263 PGS 469 & 470
PT OR 686/121

JACKSON LARRY G & LINDA G
47256 JACKSON COVE ROAD
HILLIARD, FL 32046-6497

2024

05-3N-25-0000-0001-0010

BUILDING CHARACTERISTICS

ELEMENT	CD	CONSTRUCTION
Exterior Wall	19	COMMON BRK 100
Roof Structur	03	GABLE/HIP 100
Roof Cover	03	COMP SHNGL 100
Interior Wall	05	DRYWALL 100
Interior Floo	14	CARPET 90
Interior Floo	08	SHT VINYL 10
Air Condition	03	CENTRAL 100
Heating Type	04	AIR DUCTED 100
Bedrooms		3 100
Bathrooms		2 100
Frame	02	WOOD FRAME 100
Stories	1.	1. 100
Units		0 100
BUD8 Adjustme	04	DIST 01 100
Occupancy	00	NONE 100
Quality	01	Quality Level 01
DOR CODE	0100	SINGLE FAMILY
MAP NUM		MKT AREA 05
NEIGHBORHOOD/LOC	5001.00	

AREA TYPE	TOTAL GROSS AREA	PCT OF BASE	TOT ADJ AREA	SUBAREA MARKET VALUE
BAS	1,987	100	1,987	171,041
FCP	728	25	182	15,667
FEP	190	80	152	13,084
FOP	64	30	19	1,636
FOP	133	30	40	3,443
TOTALS	3,102		2,380	204,870

MARKET ADJUSTMENTS

TYPE	MDL	EFF. AREA	TOT ADJ PTS	EFF. BASE RATE	REPL. COST NEW	AYB	EYB	ECON	FNCT		NORM	% COND
0900	01	2,380	107.6040	134.50	320,110	1968	1971	0	0	0	36.00	64.00

1 SNGL FAM – 100% - 0 Heated Area: 1987 HX Base Yr

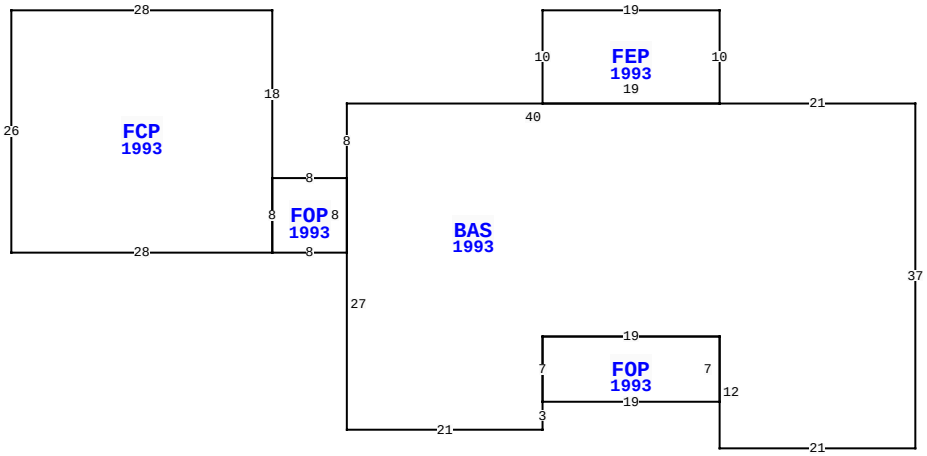

47256 JACKSON COVE RD, HILLIARD

BLD DATE		LGL DATE	
XF DATE		LAND DATE	
INC DATE		AG DATE	

NASSAU COUNTY PROPERTY

PAGE 1 of 1 4

VALUATION SUMMARY

VALUATION BY		STANDARD
Tax Group: 4	Tax Dist:	
BUILDING MARKET VALUE		204,870
TOTAL MARKET OB/XF VALUE		13,659
TOTAL LAND VALUE - MARKET		100,100
TOTAL MARKET VALUE		318,629
SOH/AGL Deduction		170,527
ASSESSED VALUE		148,102
TOTAL EXEMPTION VALUE	HX HB	50,000
BASE TAXABLE VALUE		98,102
TOTAL JUST VALUE		318,629
NCON VALUE		0
INCOME VALUE		
PREVIOUS YEAR MKT VALUE		310,004

PERMIT NUM	DESCRIPTION	AMT	ISSUED

SALES DATA

OFF RECORD Number	DATE	TYPE INST	Q U	V I	RSN CD	SALE PRICE
0686/0121	8/04/1993	WD	U	V	07	100
GRANTOR: MCKENDREE LUCILLE						
GRANTEE: JACKSON LARRY &LIND						
0567/0390	4/10/1989	WD	U	V	10	100
GRANTOR: MCKENDREE ET AL						
GRANTEE: JACKSON LARRY & L						

BUILDING NOTES

BUILDING DIMENSIONS

BAS=[YR=1993] W21 FEP=[YR=1993] N10 W19 S10 E19$ W40 S8 FOP=[YR=1993] W8 FCP=[YR=1993] N18 W28 S26 E28 N8$ S8 E8 N8$ S27 E21 N3 FOP=[YR=1993] E19 N7 W19 S7$ N7 E19 S12 E21 N37$.

EXTRA FEATURES

LN	OB/XF CODE	DESCRIPTION	BLD	CAP	L	W	UNITS	UT	Adj R	ADJ UNIT PRICE	ORIG COND	YEAR ON	YEAR ACTUAL	Q	% COND	OB/XF MKT VALUE	NOTES
1	0500	FP-PRE FAB	0	100	0	0	1.00	UT	3,500.00	3,500.00	100	1968	1968	3	30	1,050	
2	0510	GARAGE WD-	0	100	25	47	1,175.00	SF	35.00	35.00	100	1982	1982	3	20	8,225	
3	0350	CARPORT WD	0	100	0	0	252.00	SF	13.00	13.00	100	1990	1990	3	20	655	
4	0752	USP	0	100	20	26	520.00	SF	15.00	15.00	100	1990	1990	3	20	1,560	
5	0752	USP	0	100	20	6	120.00	SF	15.00	15.00	100	1990	1990	3	20	360	
6	0940	SHEDS/PORT	0	100	6	6	36.00	SF	30.00	30.00	100	1990	1990	3	20	216	
7	0351	CARPORT MT	0	100	40	24	960.00	SF	6.00	6.00	100	2002	2002	3	20	1,152	
8	0810	CONCRETE A	0	100	3	38	114.00	SF	6.50	6.50	100	1990	1990	3	59.5	441	

LAND DESCRIPTION

TOTAL OB/XF 13,659

LN	USE CODE	CLS	LAND USE DESCRIPTION	CAP	RD	LOC ZONE	FRONT	DEPTH	TOT LND UTS	UNIT TYPE	DT	DPTH FACT	% COND	TOT ADJ	UNIT PRICE	ADJ UNIT PRICE	LAND VALUE	OTHER ADJUSTMENTS AND NOTES	YEAR	DENSITY	DECL	FRZ	YR	CONSRV
1	000115	C	SFR ACRES	100	0005	OR	0.00	0.00	2.86	AC		1.00	1.00	1.00	35,000.00	35,000.00	100,100							

REVIEW DATE 05/10/2024 BY TWA Total Acres: 2.86 Total Land Value: 100,100 Market: 0 Agricultural: 0 Common: 100,100 PRINTED 08/06/2024 BY SYS