LOT 21
ROCKING HORSE FARMS PB 7/104

WELKA CHRISTOPHER L & MEAGEN B
66177 ROCKING HORSE LANE
CALLAHAN, FL 32011

2024

05-2N-26-1875-0021-0000

NASSAU COUNTY PROPERTY

BUILDING CHARACTERISTICS

ELEMENT	CD	CONSTRUCTION
Exterior Wall	10	ABOVE AVG 90
Exterior Wall	21	STONE 10
Roof Structur	03	GABLE/HIP 100
Roof Cover	03	COMP SHNGL 100
Interior Wall	05	DRYWALL 100
Interior Floo	13	LVT/LAMNT 50
Interior Floo	14	CARPET 50
Air Condition	03	CENTRAL 100
Heating Type	04	AIR DUCTED 100
Bedrooms		3 100
Bathrooms		2.5 100
Frame	02	WOOD FRAME 100
Stories	2.	2. 100
Units		0 100
Occupancy	00	NONE 100
Quality	04	Quality Level 04
DOR CODE	0100	SINGLE FAMILY
MAP NUM		MKT AREA 05
NEIGHBORHOOD/LOC	5008.00	

AREA TYPE	TOTAL GROSS AREA	PCT OF BASE	TOT ADJ AREA	SUBAREA MARKET VALUE
BAS	1,857	100	1,857	250,582
FGR	434	55	239	32,250
FOP	89	30	27	3,644
FOP	224	30	67	9,040
FUS	600	100	600	80,963
STR	40	10	4	540
UUS	81	50	40	5,398
TOTALS	3,325		2,834	382,417

MARKET ADJUSTMENTS

TYPE	MDL	EFF. AREA	TOT ADJ PTS	EFF. BASE RATE	REPL. COST NEW	AYB	EYB	ECON	FNCT		NORM	% COND
0900	01	2,834	110.7792	138.47	392,424	2017	2017	0	0	0	2.55	97.45

1 SNGL FAM – 0% - 0 Heated Area: 2457 HX Base Yr

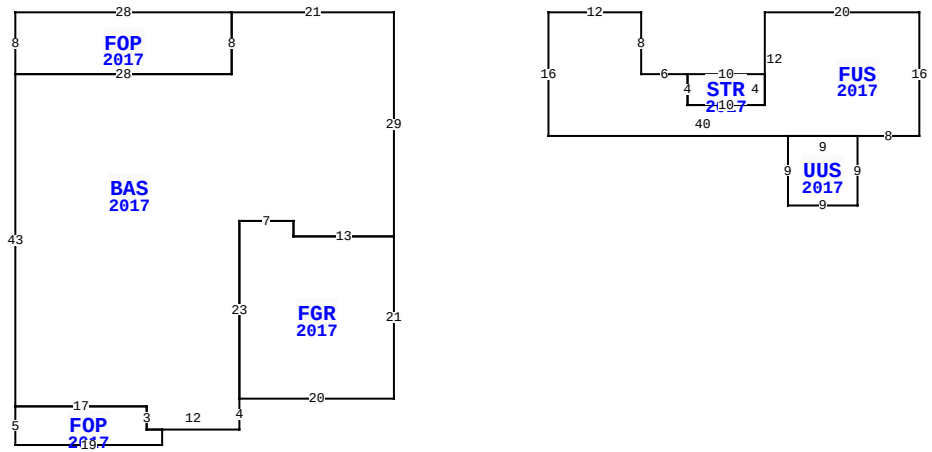

66177 ROCKING HORSE LN, CALLAHAN

BLD DATE		LGL DATE	
XF DATE		LAND DATE	
INC DATE		AG DATE	

NASSAU COUNTY PROPERTY — VALUATION SUMMARY

VALUATION BY	STANDARD
Tax Group: 4	Tax Dist:
BUILDING MARKET VALUE	382,417
TOTAL MARKET OB/XF VALUE	4,313
TOTAL LAND VALUE - MARKET	65,000
TOTAL MARKET VALUE	451,730
SOH/AGL Deduction	34,144
ASSESSED VALUE	417,586
TOTAL EXEMPTION VALUE	0
BASE TAXABLE VALUE	417,586
TOTAL JUST VALUE	451,730
NCON VALUE	0
INCOME VALUE	
PREVIOUS YEAR MKT VALUE	434,483

PERMIT NUM	DESCRIPTION	AMT	ISSUED
17006714	CO ISSUED	0	07/27/2017
1700153	NEW CONSTR	305,167	01/01/2017

SALES DATA

OFF RECORD Number	DATE	TYPE INST	Q U	V I	RSN CD	SALE PRICE
2469/0780	6/01/2021	WD	Q	I	01	399,900
GRANTOR: YOUNG LORI A						
GRANTEE: WELKA CHRISTOPHER L						
2068/1169	8/29/2016	WD	Q	V	01	55,000
GRANTOR: ROCKING HORSE DEVELOP						
GRANTEE: YOUNG LORI A						

BUILDING NOTES

BUILDING DIMENSIONS

BAS=[YR=2017] W21 FOP=[YR=2017] W28 S8 E28 N8$ S8 W28 S43
FOP=[YR=2017] S5 E19 N2 W2 N3 W17$ E17 S3 E12 N4
FGR=[YR=2017] E20 N21 W13 N2 W7 S23$ N23 E7 S2 E13 N29$
PTR=E20 FUS=[YR=2017] E12 S8 E6 STR=[YR=2017] E10 S4 W10 N4$
S4 E10 N12 E20 S16 W8 UUS=[YR=2017] S9 W9 N9 E9$ W40 N16$
W20$.

EXTRA FEATURES

LN	OB/XF CODE	DESCRIPTION	BLD	CAP	L	W	UNITS	UT	Adj R	ADJ UNIT PRICE	ORIG COND	YEAR ON	YEAR ACTUAL	Q	% COND	OB/XF MKT VALUE	NOTES
1	0810	CONCRETE A	0	0	0	0	684.00	SF	6.50	6.50	100	2017	2017	3	97	4,313	

LAND DESCRIPTION

TOTAL OB/XF 4,313

LN	USE CODE	CLS	LAND USE DESCRIPTION	CAP	RD	LOC ZONE	FRONT	DEPTH	TOT LND UTS	UNIT TYPE	DT	DPTH FACT	% COND	TOT ADJ	UNIT PRICE	ADJ UNIT PRICE	LAND VALUE	OTHER ADJUSTMENTS AND NOTES	YEAR	DENSITY	DECL	FRZ	YR	CONSRV
1	000100	C	SFR	0		RS-E	0.00	0.00	1.00	LT		1.00	1.00	1.00	65,000.00	65,000.00	65,000							

REVIEW DATE 03/06/2020 BY KBP Total Acres: 0.00 Total Land Value: 65,000 Market: 0 Agricultural: 0 Common: 65,000 PRINTED 08/06/2024 BY SYS