LOT 17
IN OR 2069/146
ROCKING HORSE FARMS PB 7/104

TERRELL ALBERT N JR & ELIZABETH RAND
66367 ROCKING HORSE LANE
CALLAHAN, FL 32011

2024

05-2N-26-1875-0017-0000

BUILDING CHARACTERISTICS

ELEMENT	CD	CONSTRUCTION
Exterior Wall	20	FACE BRICK 100
Roof Structur	03	GABLE/HIP 100
Roof Cover	03	COMP SHNGL 100
Interior Wall	05	DRYWALL 100
Interior Floo	08	SHT VINYL 70
Interior Floo	14	CARPET 30
Air Condition	03	CENTRAL 100
Heating Type	04	AIR DUCTED 100
Bedrooms		3 100
Bathrooms		2 100
Frame	02	WOOD FRAME 100
Stories	1.	1. 100
Units		0 100
Occupancy	00	NONE 100
Quality	04	Quality Level 04

DOR CODE	0100	SINGLE FAMILY	
MAP NUM		MKT AREA	05
NEIGHBORHOOD/LOC	5008.00		

AREA TYPE	TOTAL GROSS AREA	PCT OF BASE	TOT ADJ AREA	SUBAREA MARKET VALUE
BAS	2,259	100	2,259	290,853
FGR	566	55	311	40,042
FOP	46	30	14	1,802
FOP	150	30	45	5,794
FST	226	55	124	15,966
PTO	234	5	12	1,545
TOTALS	3,481		2,765	356,002

MARKET ADJUSTMENTS

TYPE	MDL	EFF. AREA	TOT ADJ PTS	EFF. BASE RATE	REPL. COST NEW	AYB	EYB	ECON	FNCT		NORM	% COND
0900	01	2,765	107.8560	134.82	372,777	2017	2017	0	0	0	4.50	95.50

1 SNGL FAM – 100% - 2018 Heated Area: 2259 HX Base Yr 2018

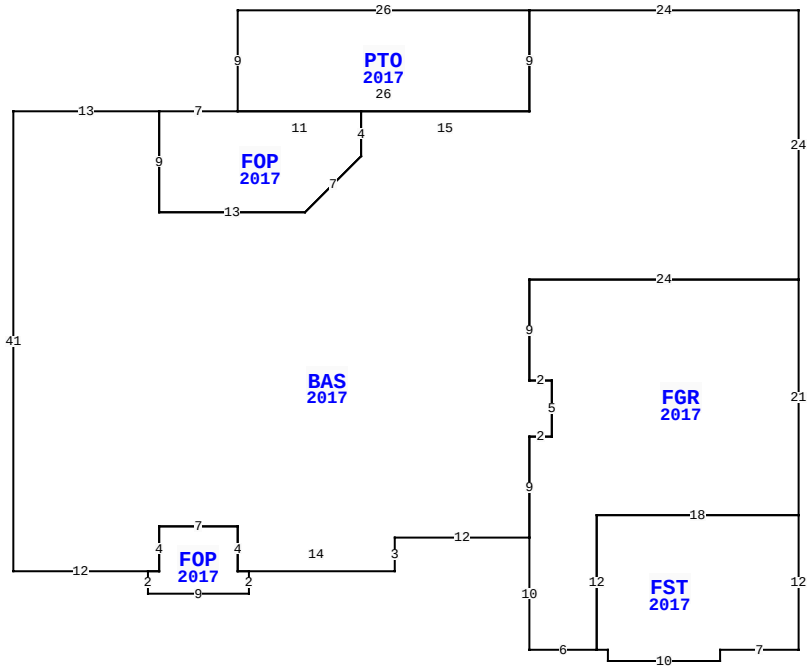

66367 ROCKING HORSE LN, CALLAHAN

BLD DATE		LGL DATE	
XF DATE		LAND DATE	
INC DATE		AG DATE	

NASSAU COUNTY PROPERTY

PAGE 1 of 1 4

VALUATION SUMMARY

VALUATION BY		STANDARD
Tax Group: 4	Tax Dist:	
BUILDING MARKET VALUE		356,002
TOTAL MARKET OB/XF VALUE		25,739
TOTAL LAND VALUE - MARKET		65,000
TOTAL MARKET VALUE		446,741
SOH/AGL Deduction		267,319
ASSESSED VALUE		179,422
TOTAL EXEMPTION VALUE	HX HB DX	55,000
BASE TAXABLE VALUE		124,422
TOTAL JUST VALUE		446,741
NCON VALUE		0
INCOME VALUE		
PREVIOUS YEAR MKT VALUE		432,125

PERMIT NUM	DESCRIPTION	AMT	ISSUED
17003102	CO ISSUED	0	04/10/2017
1700121	GARAGE	22,315	01/01/2017
B1633083	NEW CONSTR	286,901	09/01/2016

SALES DATA

OFF RECORD Number	DATE	TYPE INST	Q U /	V I /	RSN CD	SALE PRICE
2069/0146	8/26/2016	WD	Q	V	01	40,000
GRANTOR: PREMIER HOMES OF NORT						
GRANTEE: TERRELL ALBERT N JR						
2069/0144	8/26/2016	WD	Q	V	01	35,000
GRANTOR: ROCKING HORSE DEVELOP						
GRANTEE: PREMIER HOMES OF NO						

BUILDING NOTES

BUILDING DIMENSIONS

BAS=[YR=2017] W24 PTO=[YR=2017] W26 S9 FOP=[YR=2017] W7 S9 E13 U5 R5 N4 W11$ E26 N9$ S9 W15 S4 D5 L5 W13 N9 W13 S41 E12 FOP=[YR=2017] S2 E9 N2 W1 N4 W7 S4 W1$ E1 N4 E7 S4 E14 N3 E12 FGR=[YR=2017] S10 E6 FST=[YR=2017] E1 S1 E10 N1 E7 N12 W18 S12$ N12 E18 N21 W24 S9 E2 S5 W2 S9$ N9 E2 N5 W2 N9 E24 N24$.

EXTRA FEATURES

LN	OB/XF CODE	DESCRIPTION	BLD	CAP	L	W	UNITS	UT	Adj R	ADJ UNIT PRICE	ORIG COND	YEAR ON	YEAR ACTUAL	Q	% COND	OB/XF MKT VALUE	NOTES
1	0812	CONCRETE C	0	100	0	0	2,340.00	SF	4.00	4.00	100	2017	2017	3	97	9,079	
2	0504	FP-ELECTRI	0	100	0	0	1.00	UT	2,000.00	2,000.00	100	2017	2017	3	98	1,960	
3	0510	GARAGE WD-	0	100	25	20	500.00	SF	35.00	35.00	100	2017	2017	3	84	14,700	

LAND DESCRIPTION

TOTAL OB/XF 25,739

LN	USE CODE	CLS	LAND USE DESCRIPTION	CAP	RD	LOC ZONE	FRONT	DEPTH	TOT LND UTS	UNIT TYPE	DT	DPTH FACT	% COND	TOT ADJ	UNIT PRICE	ADJ UNIT PRICE	LAND VALUE	OTHER ADJUSTMENTS AND NOTES	YEAR	DENSITY	DECL	FRZ	YR	CONSRV
1	000100	C	SFR	100		RS-E	0.00	0.00	1.00	LT		1.00	1.00	1.00	65,000.00	65,000.00	65,000							

REVIEW DATE 03/06/2020 BY KBP Total Acres: 0.00 Total Land Value: 65,000 Market: 0 Agricultural: 0 Common: 65,000 PRINTED 08/06/2024 BY SYS