LOT 11
IN OR 2092/325
ROCKING HORSE FARMS PB 7/104

JORDAN ROBERT L JR/JORDAN CAROLYN W
66420 ROCKING HORSE LN
CALLAHAN, FL 32011

2024

05-2N-26-1875-0011-0000

NASSAU COUNTY PROPERTY

BUILDING CHARACTERISTICS

ELEMENT	CD	CONSTRUCTION
Exterior Wall	10	ABOVE AVG 100
Roof Structur	03	GABLE/HIP 100
Roof Cover	03	COMP SHNGL 100
Interior Wall	05	DRYWALL 100
Interior Floo	08	SHT VINYL 50
Interior Floo	14	CARPET 50
Air Condition	03	CENTRAL 100
Heating Type	04	AIR DUCTED 100
Bedrooms		4 100
Bathrooms		2.5 100
Frame	02	WOOD FRAME 100
Stories	2.	2. 100
Units		0 100
Occupancy	00	NONE 100
Quality	04	Quality Level 04
DOR CODE	0100	SINGLE FAMILY
MAP NUM		MKT AREA 05
NEIGHBORHOOD/LOC	5008.00	

AREA TYPE	TOTAL GROSS AREA	PCT OF BASE	TOT ADJ AREA	SUBAREA MARKET VALUE
BAS	1,202	100	1,202	153,916
FGR	462	55	254	32,525
FOP	24	30	7	896
FOP	156	30	47	6,018
FUS	1,395	100	1,395	178,629
STR	36	10	4	512
TOTALS	3,275		2,909	372,496

MARKET ADJUSTMENTS

TYPE	MDL	EFF. AREA	TOT ADJ PTS	EFF. BASE RATE	REPL. COST NEW	AYB	EYB	ECON	FNCT		NORM	% COND
0900	01	2,909	105.6090	132.01	384,017	2016	2016	0	0	0	3.00	97.00

1 SNGL FAM – 100% - 2019 Heated Area: 2597 HX Base Yr 2019

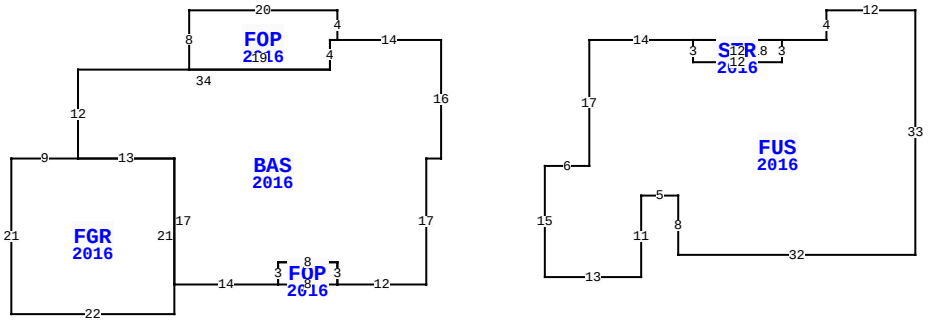

66420 ROCKING HORSE LN, CALLAHAN

BLD DATE		LGL DATE	
XF DATE		LAND DATE	
INC DATE		AG DATE	

VALUATION SUMMARY

VALUATION BY		STANDARD
Tax Group: 4	Tax Dist:	
BUILDING MARKET VALUE		372,496
TOTAL MARKET OB/XF VALUE		9,530
TOTAL LAND VALUE - MARKET		65,000
TOTAL MARKET VALUE		447,026
SOH/AGL Deduction		159,033
ASSESSED VALUE		287,993
TOTAL EXEMPTION VALUE	HX HB VX	55,000
BASE TAXABLE VALUE		232,993
TOTAL JUST VALUE		447,026
NCON VALUE		0
INCOME VALUE		
PREVIOUS YEAR MKT VALUE		430,327

PERMIT NUM	DESCRIPTION	AMT	ISSUED
B1632590	CO ISSUED	0	11/23/2016
B1632590	NEW CONSTR	284,469	06/01/2016

SALES DATA

OFF RECORD Number	DATE	TYPE INST	Q U	V I	RSN CD	SALE PRICE
2092/0325	12/30/2016	WD	Q	I	01	275,000
GRANTOR: PREMIER HOMES OF NORT						
GRANTEE: JORDAN ROBERT L JR						
2027/0249	1/19/2016	WD	Q	V	05	105,000
GRANTOR: ROCKING HORSE DEVELOP						
GRANTEE: PREMIER HOMES OF NO						

BUILDING NOTES

BUILDING DIMENSIONS

BAS=[YR=2016] W14 FOP=[YR=2016] N4 W20 S8 E19 N4 E1$ W1 S4 W34 S12 FGR=[YR=2016] W9 S21 E22 N21 W13$ E13 S17 E14 FOP=[YR=2016] E8 N3 W8 S3$ N3 E8 S3 E12 N17 E2 N16$ PTR=E20 FUS=[YR=2016] E14 STR=[YR=2016] E12 S3 W12 N3$ E18 N4 E12 S33 W32 N8 W5 S11 W13 N15 E6 N17$ W20$.

EXTRA FEATURES

LN	OB/XF CODE	DESCRIPTION	BLD	CAP	L	W	UNITS	UT	Adj R	ADJ UNIT PRICE	ORIG COND	YEAR ON	YEAR ACTUAL	Q	% COND	OB/XF MKT VALUE	NOTES
1	0811	CONCRETE B	0	100	0	0	1,909.00	SF	5.20	5.20	100	2016	2016	3	96	9,530	

LAND DESCRIPTION

TOTAL OB/XF 9,530

LN	USE CODE	CLS	LAND USE DESCRIPTION	CAP	RD	LOC ZONE	FRONT	DEPTH	TOT LND UTS	UNIT TYPE	DT	DPTH FACT	% COND	TOT ADJ	UNIT PRICE	ADJ UNIT PRICE	LAND VALUE	OTHER ADJUSTMENTS AND NOTES	YEAR	DENSITY	DECL	FRZ	YR	CONSRV
1	000100	C	SFR	100		RS-E	0.00	0.00	1.00	LT		1.00	1.00	1.00	65,000.00	65,000.00	65,000							

REVIEW DATE 03/06/2020 BY KBP Total Acres: 0.00 Total Land Value: 65,000 Market: 0 Agricultural: 0 Common: 65,000 PRINTED 08/06/2024 BY SYS