IN OR 1765/1570
EX 1-4

HARDIN MICHAEL C & TRACY M
44020 MAUDE ST
CALLAHAN, FL 32011

2024

05-1N-25-0000-0001-0020

BUILDING CHARACTERISTICS

ELEMENT	CD	CONSTRUCTION
Exterior Wall	30	VINYL 100
Roof Structur	03	GABLE/HIP 100
Roof Cover	03	COMP SHNGL 100
Interior Wall	05	DRYWALL 100
Interior Floo	14	CARPET 80
Interior Floo	11	CLAY TILE 20
Air Condition	03	CENTRAL 100
Heating Type	04	AIR DUCTED 100
Bedrooms		5 100
Bathrooms		3.5 100
Frame	02	WOOD FRAME 100
Stories	2.	2. 100
Units		0 100
Occupancy	00	NONE 100
Quality	03	Quality Level 03
DOR CODE	0100	SINGLE FAMILY
MAP NUM		MKT AREA 08
NEIGHBORHOOD/LOC	8001.00	

AREA TYPE	TOTAL GROSS AREA	PCT OF BASE	TOT ADJ AREA	SUBAREA MARKET VALUE
BAS	672	100	672	72,665
BAS	672	100	672	72,665
BAS	2,328	100	2,328	251,734
FEP	384	80	307	33,197
FGR	576	55	317	34,278
FGR	576	55	317	34,278
FOP	96	30	29	3,136
FOP	96	30	29	3,136
FOP	128	30	38	4,109
FOP	256	30	77	8,327
TOTALS	8,773		7,181	776,503

MARKET ADJUSTMENTS

TYPE	MDL	EFF. AREA	TOT ADJ PTS	EFF. BASE RATE	REPL. COST NEW	AYB	EYB	ECON	FNCT		NORM	% COND
0900	01	7,181	97.4700	121.84	874,933	2000	2000	0	0	0	11.25	88.75

1 SNGL FAM – 100% - 2012 Heated Area: 5813 HX Base Yr 2012

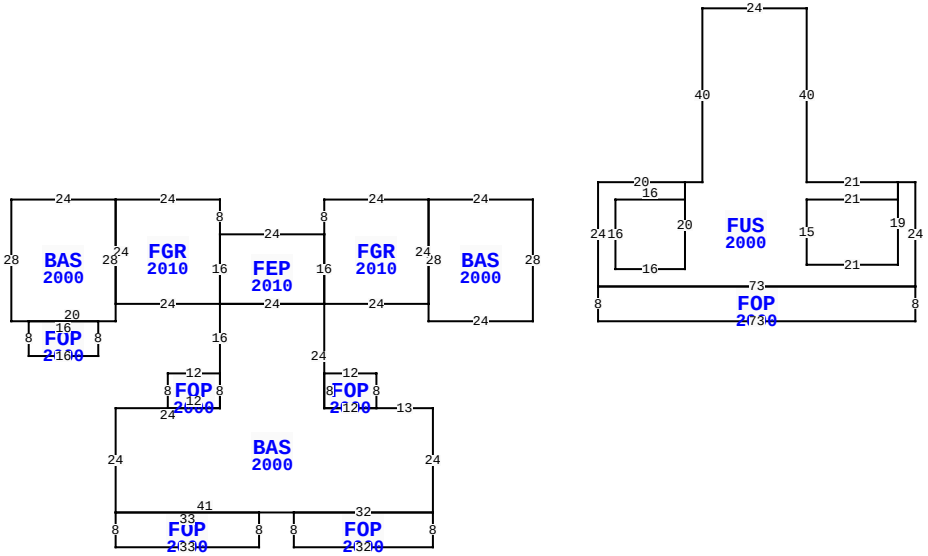

** This building has 13 Sub-Areas

44020 MAUDE ST, CALLAHAN

BLD DATE		LGL DATE	
XF DATE		LAND DATE	05/24/2023 MLU
INC DATE		AG DATE	

NASSAU COUNTY PROPERTY

PAGE 1 of 1 6

VALUATION SUMMARY

VALUATION BY		STANDARD
Tax Group: 6	Tax Dist:	
BUILDING MARKET VALUE		776,503
TOTAL MARKET OB/XF VALUE		17,360
TOTAL LAND VALUE - MARKET		341,005
TOTAL MARKET VALUE		1,134,868
SOH/AGL Deduction		650,416
ASSESSED VALUE		484,452
TOTAL EXEMPTION VALUE	HX HB	50,000
BASE TAXABLE VALUE		434,452
TOTAL JUST VALUE		1,134,868
NCON VALUE		0
INCOME VALUE		
PREVIOUS YEAR MKT VALUE		1,100,300

PERMIT NUM	DESCRIPTION	AMT	ISSUED
B99598	NEW CONSTR	200,807	01/04/1999

SALES DATA

OFF RECORD Number	DATE	TYPE INST	Q / U	V / I	RSN CD	SALE PRICE
1765/1570	11/18/2011	WD	U	I	12	300,000
GRANTOR: SPRINGLEAF HOME EQUIT						
GRANTEE: HARDIN MICHAEL C &						
1765/1566	12/30/2010	WD	U	I	11	100
GRANTOR: HIGGINBOTHAM GARY L &						
GRANTEE: AMERICAN GENERAL HO						

BUILDING NOTES

BUILDING DIMENSIONS

BAS=[YR=2000] W24 FGR=[YR=2010] W24 S8 FEP=[YR=2010] W24 FGR=[YR=2010] N8 W24 BAS=[YR=2000] W24 S28 E4FOP=[YR=2000] S8 E16 N8 W16 $ E20 N28 $ S24 E24 BAS=[YR=2000] S16 FOP=[YR=2000] W12 S8 E12 N8 $ S8 W24 S24 FOP=[YR=2000] S8 E33 N8 W33$ E41 FOP=[YR=2000] S8 E32 N8 W32 $E32 N24 W13 FOP=[YR=2000] N8 W12 S8E12 $ W12 N24 W24$ N16$ S16 E24 N16$ S16 E24 N24 $ S28 E24 N28 $ PTR= E35 FUS=[YR=2000] N4 W20 S24 FOP=[YR=2000] S8 E73 N8 W73 $ E73 N24 W4 S19 W21 N15 E21 N4 W21 N40 W24 S40 W4 S20 W16 N16 E16 $ W35 $.

EXTRA FEATURES

LN	OB/XF CODE	DESCRIPTION	BLD	CAP	L	W	UNITS	UT	Adj R	ADJ UNIT PRICE	ORIG COND	YEAR ON	YEAR ACTUAL	Q	% COND	OB/XF MKT VALUE	NOTES
1	0811	CONCRETE B	0	100	37	25	925.00	SF	5.20	5.20	100	2000	2000	3	79	3,800	
2	0409	ELEVATOR R	0	100	0	0	1.00	UT	10,200.00	10,200.00	0	2000	2000	3	100	10,200	
3	0504	FP-ELECTRI	0	100	0	0	2.00	UT	2,000.00	2,000.00	100	2000	2000	3	84	3,360	

LAND DESCRIPTION

TOTAL OB/XF 17,360

LN	USE CODE	CLS	LAND USE DESCRIPTION	CAP	RD	LOC ZONE	FRONT	DEPTH	TOT LND UTS	UNIT TYPE	DT	DPTH FACT	% COND	TOT ADJ	UNIT PRICE	ADJ UNIT PRICE	LAND VALUE	OTHER ADJUSTMENTS AND NOTES	YEAR	DENSITY	DECL	FRZ	YR	CONSRV
1	000115	C	SFR ACRES	100	0005	OR	0.00	0.00	23.77	AC		1.00	1.00	1.00	14,000.00	14,000.00	332,780							
2	009525	C	RES POND	0			0.00	0.00	3.29	AC		1.00	1.00	1.00	2,500.00	2,500.00	8,225							

REVIEW DATE 07/25/2022 BY KBA Total Acres: 27.06 Total Land Value: 341,005 Market: 0 Agricultural: 0 Common: 341,005 PRINTED 08/06/2024 BY SYS