PT OF S1/2
IN OR 752/867
ESMT OR 1236/1430

SELDOMRIDGE MICHAEL & DAWN M
17366 PARADISE DRIVE
HILLIARD, FL 32046

2024

04-3N-23-0000-0003-0040

NASSAU COUNTY PROPERTY

BUILDING CHARACTERISTICS

ELEMENT	CD	CONSTRUCTION
Exterior Wall	20	FACE BRICK 100
Roof Structur	03	GABLE/HIP 100
Roof Cover	03	COMP SHNGL 100
Interior Wall	05	DRYWALL 100
Interior Floo	14	CARPET 100
Air Condition	03	CENTRAL 100
Heating Type	04	AIR DUCTED 100
Bedrooms		1 100
Bathrooms		1 100
Frame	02	WOOD FRAME 100
Stories	1.	1. 100
Units		0 100
Occupancy	00	NONE 100
Quality	01	Quality Level 01
DOR CODE	0100	SINGLE FAMILY
MAP NUM		MKT AREA 09
NEIGHBORHOOD/LOC	9002.00	

AREA TYPE	TOTAL GROSS AREA	PCT OF BASE	TOT ADJ AREA	SUBAREA MARKET VALUE
AOF	243	110	267	32,281
HXB	625	100	625	75,564
HXG	648	55	356	43,041
HXP	66	30	20	2,418
TOTALS	1,582		1,268	153,303

MARKET ADJUSTMENTS

TYPE	MDL	EFF. AREA	TOT ADJ PTS	EFF. BASE RATE	REPL. COST NEW	AYB	EYB	ECON	FNCT		NORM	% COND
0500	01	1,268	102.0240	153.04	194,055	1995	1995	0	0	0	21.00	79.00

1 SFR CUST – 78.94% - 0 Heated Area: 868 HX Base Yr

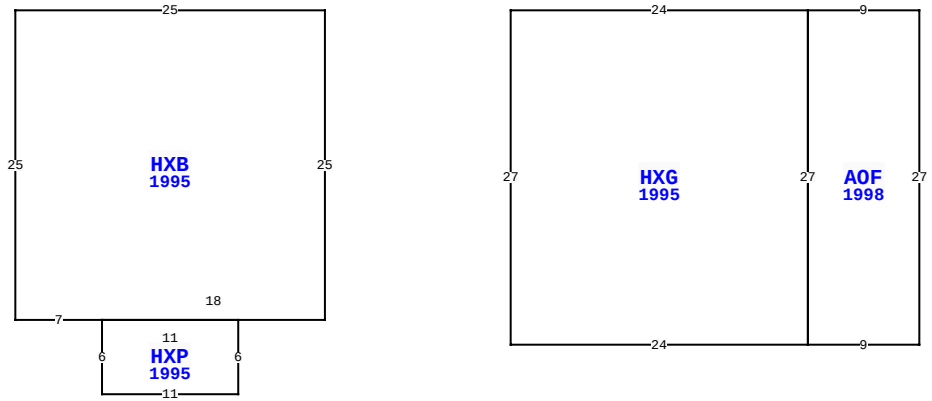

17366 PARADISE DR, HILLIARD

BLD DATE	07/24/2015 KK	LGL DATE	
XF DATE		LAND DATE	06/16/2023 MLU
INC DATE		AG DATE	

VALUATION SUMMARY

VALUATION BY		STANDARD
Tax Group: 4	Tax Dist:	
BUILDING MARKET VALUE		678,488
TOTAL MARKET OB/XF VALUE		16,236
TOTAL LAND VALUE - MARKET		114,550
TOTAL MARKET VALUE		809,274
SOH/AGL Deduction		449,536
ASSESSED VALUE		359,738
TOTAL EXEMPTION VALUE	HX HB	50,000
BASE TAXABLE VALUE		309,738
TOTAL JUST VALUE		809,274
NCON VALUE		0
INCOME VALUE		
PREVIOUS YEAR MKT VALUE		781,491

PERMIT NUM	DESCRIPTION	AMT	ISSUED
M026042	ADDITION	0	06/01/2002
R013466	REPAIR/RRF	0	08/01/2001

SALES DATA

OFF RECORD Number	DATE	TYPE INST	Q / U	V / I	RSN CD	SALE PRICE
0752/0867	2/26/1996	WD	U	V	07	100

GRANTOR: COGBURN LARRY & BARBA

GRANTEE: SELDOMRIDGE MICHAEL

BUILDING NOTES

BUILDING DIMENSIONS

HXB=[YR=1995] W25 S25 E7 HXP=[YR=1995] S6 E11 N6 W11$ E18 N25$ PTR=E15 HXG=[YR=1995] E24 AOF=[YR=1998] E9 S27W9 N27 $ S27 W24 N27 $ W15 $.

EXTRA FEATURES

LN	OB/XF CODE	DESCRIPTION	BLD	CAP	L	W	UNITS	UT	Adj R	ADJ UNIT PRICE	ORIG COND	YEAR ON	YEAR ACTUAL	Q	% COND	OB/XF MKT VALUE	NOTES
1	0812	CONCRETE C	0	100	0	0	1,237.00	SF	4.00	4.00	100	2003	2003	3	83	4,107	
2	0812	CONCRETE C	0	100	0	0	1,080.00	SF	4.00	4.00	100	1997	1997	3	73	3,154	
3	0940	SHEDS/PORT	0	100	12	12	144.00	SF	30.00	30.00	100	1997	1997	3	20	864	
4	0504	FP-ELECTRI	0	100	0	0	1.00	UT	2,000.00	2,000.00	100	2003	2003	3	87	1,740	
5	1127	BRICK 8"	0	100	27	4	108.00	SF	11.00	11.00	100	2003	2003	3	95	1,129	
6	0803	ASPHALT C	0	100	0	0	4,680.00	SF	2.00	2.00	100	2005	2005	3	56	5,242	

LAND DESCRIPTION

TOTAL OB/XF 16,236

LN	USE CODE	CLS	LAND USE DESCRIPTION	CAP	RD	LOC ZONE	FRONT	DEPTH	TOT LND UTS	UNIT TYPE	DT	DPTH FACT	% COND	TOT ADJ	UNIT PRICE	ADJ UNIT PRICE	LAND VALUE	OTHER ADJUSTMENTS AND NOTES	YEAR	DENSITY	DECL	FRZ	YR	CONSRV
1	000115	C	SFR ACRES	0	0006	OR	0.00	0.00	0.71	AC		1.00	1.00	1.00	30,000.00	30,000.00	21,300							
2	000115	C	SFR ACRES	100	0006	OR	0.00	0.00	3.73	AC		1.00	1.00	1.00	25,000.00	25,000.00	93,250							

REVIEW DATE 06/07/2021 BY TWA Total Acres: 4.44 Total Land Value: 114,550 Market: 0 Agricultural: 0 Common: 114,550 PRINTED 08/06/2024 BY SYS

PT OF S1/2
IN OR 752/867
ESMT OR 1236/1430

SELDOMRIDGE MICHAEL & DAWN M
17366 PARADISE DRIVE
HILLIARD, FL 32046

2024

04-3N-23-0000-0003-0040

NASSAU COUNTY PROPERTY

BUILDING CHARACTERISTICS

ELEMENT	CD	CONSTRUCTION
Exterior Wall	20	FACE BRICK 100
Roof Structur	08	IRREGULAR 100
Roof Cover	03	COMP SHNGL 100
Interior Wall	05	DRYWALL 100
Interior Floo	11	CLAY TILE 50
Interior Floo	14	CARPET 50
Air Condition	03	CENTRAL 100
Heating Type	04	AIR DUCTED 100
Bedrooms		3 100
Bathrooms		2.5 100
Frame	02	WOOD FRAME 100
Stories	2.	2. 100
Units		0 100
Occupancy	00	NONE 100
Quality	01	Quality Level 01
DOR CODE	0100	SINGLE FAMILY
MAP NUM		MKT AREA 09
NEIGHBORHOOD/LOC	9002.00	

AREA TYPE	TOTAL GROSS AREA	PCT OF BASE	TOT ADJ AREA	SUBAREA MARKET VALUE
BAS	3,094	100	3,094	340,440
BAS	135	100	135	14,855
FGR	647	55	356	39,171
FOP	60	30	18	1,981
FOP	99	30	30	3,301
FSP	275	40	110	12,104
FST	144	55	79	8,693
FUS	951	100	951	104,641
TOTALS	5,405		4,773	525,185

MARKET ADJUSTMENTS

TYPE	MDL	EFF. AREA	TOT ADJ PTS	EFF. BASE RATE	REPL. COST NEW	AYB	EYB	ECON	FNCT		NORM	% COND
0500	01	4,773	86.3010	129.45	617,865	2003	2003	0	0	0	15.00	85.00

2 SFR CUST – 100% - 0 Heated Area: 4180 HX Base Yr

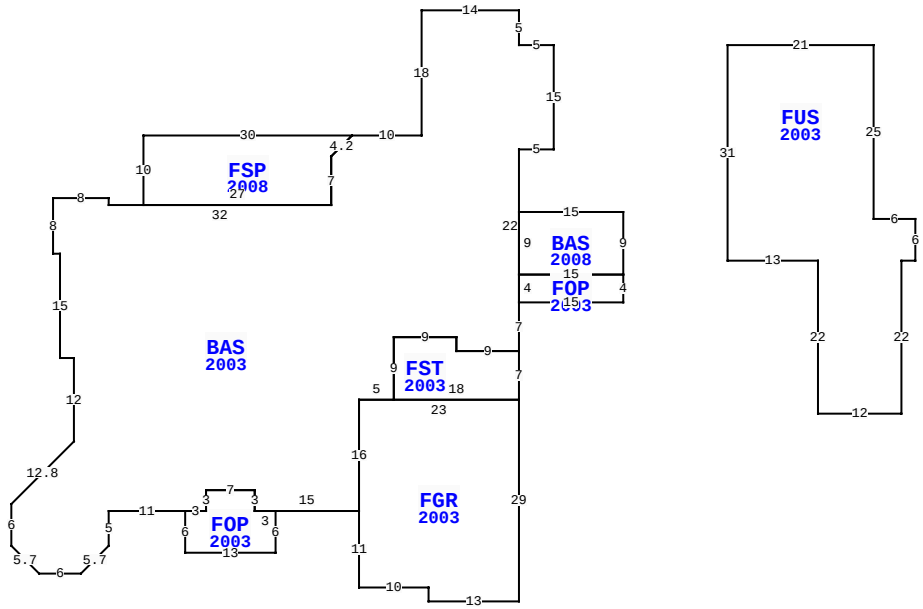

17366 PARADISE DR, HILLIARD

BLD DATE	07/24/2015 KK	LGL DATE	
XF DATE		LAND DATE	06/16/2023 MLU
INC DATE		AG DATE	

VALUATION SUMMARY

VALUATION BY		STANDARD
Tax Group: 4	Tax Dist:	
BUILDING MARKET VALUE		678,488
TOTAL MARKET OB/XF VALUE		16,236
TOTAL LAND VALUE - MARKET		114,550
TOTAL MARKET VALUE		809,274
SOH/AGL Deduction		449,536
ASSESSED VALUE		359,738
TOTAL EXEMPTION VALUE	HX HB	50,000
BASE TAXABLE VALUE		309,738
TOTAL JUST VALUE		809,274
NCON VALUE		0
INCOME VALUE		
PREVIOUS YEAR MKT VALUE		781,491

PERMIT NUM	DESCRIPTION	AMT	ISSUED

SALES DATA

OFF RECORD Number	DATE	TYPE INST	Q / U	V / I	RSN CD	SALE PRICE
0752/0867	2/26/1996	WD	U	V	07	100

GRANTOR: COGBURN LARRY & BARBA

GRANTEE: SELDOMRIDGE MICHAEL

BUILDING NOTES

EXTRA FEATURES

L N	OB/XF CODE	DESCRIPTION	BLD	CAP	L	W	UNITS	UT	Adj R	ADJ UNIT PRICE	ORIG COND	YEAR ON	YEAR ACTUAL	Q	% COND	OB/XF MKT VALUE	NOTES

BUILDING DIMENSIONS

BAS=[YR=2003] W5 N5 W14 S18 W10 FSP=[YR=2008] W30 S10 E27 N7 R3 U3 $ D3 L3 S7 W32 N1 W8 S8 E1 S15 E2 S12 D9 L9 S6 R4 D4 E6 U4 R4 N5 E11 FOP=[YR=2003] S6 E13 N6 W3 N3 W7 S3 W3$ E3 N3 E7 S3 E15 FGR=[YR=2003] S11 E10 S2 E13 N29 FST=[YR=2003] N7 W9 N2 W9 S9 E18$ W23 S16$ N16 E5 N9 E9 S2 E9 N7 FOP=[YR=2003] E15 N4 BAS=[YR=2008] N9 W15 S9 E15$ W15 S4$ N22 E5 N15$ PTR= E25 FUS=[YR=2003] E21 S25 E6 S6 W2 S22 W12 N22 W13 N31 $ W25 $.

LAND DESCRIPTION

TOTAL OB/XF 0

L N	USE CODE	CLS	LAND USE DESCRIPTION	CAP	R D	LOC ZONE	FRONT	DEPTH	TOT LND UTS	UNIT TYPE	D T	DPTH FACT	% COND	TOT ADJ	UNIT PRICE	ADJ UNIT PRICE	LAND VALUE	OTHER ADJUSTMENTS AND NOTES	YEAR	DENSITY	DECL	FRZ	YR	CONSRV

REVIEW DATE 06/07/2021 BY TWA Total Acres: 4.44 Total Land Value: 114,550 Market: 0 Agricultural: 0 Common: 114,550 PRINTED 08/06/2024 BY SYS