PT SEC 4-2N-26 IN OR 2551/269

SMITH ELIJAH & BROOKE
66092 WESTBERRY LANE
CALLAHAN, FL 32011

2024

04-2N-26-0000-0001-0030

NASSAU COUNTY PROPERTY

BUILDING CHARACTERISTICS

ELEMENT	CD	CONSTRUCTION
Exterior Wall	16	WD FR STUC 100
Roof Structur	03	GABLE/HIP 100
Roof Cover	03	COMP SHNGL 100
Interior Wall	05	DRYWALL 100
Interior Floo	11	CLAY TILE 50
Interior Floo	13	LVT/LAMNT 50
Air Condition	03	CENTRAL 100
Heating Type	04	AIR DUCTED 100
Bedrooms		4 100
Bathrooms		2 100
Frame	02	WOOD FRAME 100
Stories	1.	1. 100
Units		1 100
Occupancy	00	NONE 100
Quality	04	Quality Level 04
DOR CODE	0100	SINGLE FAMILY
MAP NUM		MKT AREA 05
NEIGHBORHOOD/LOC	5001.00	

AREA TYPE	TOTAL GROSS AREA	PCT OF BASE	TOT ADJ AREA	SUBAREA MARKET VALUE
BAS	1,517	100	1,517	226,915
DCK	64	10	6	898
FOP	104	30	31	4,637
FOP	152	30	46	6,881
STP	35	10	4	598
UST	48	45	22	3,291
TOTALS	1,920		1,626	243,219

MARKET ADJUSTMENTS

TYPE	MDL	EFF. AREA	TOT ADJ PTS	EFF. BASE RATE	REPL. COST NEW	AYB	EYB	ECON	FNCT		NORM	% COND
0900	01	1,626	127.9845	159.98	260,127	1950	2010	0	0	0	6.50	93.50

1 SNGL FAM – 0% - 2023 Heated Area: 1517 HX Base Yr

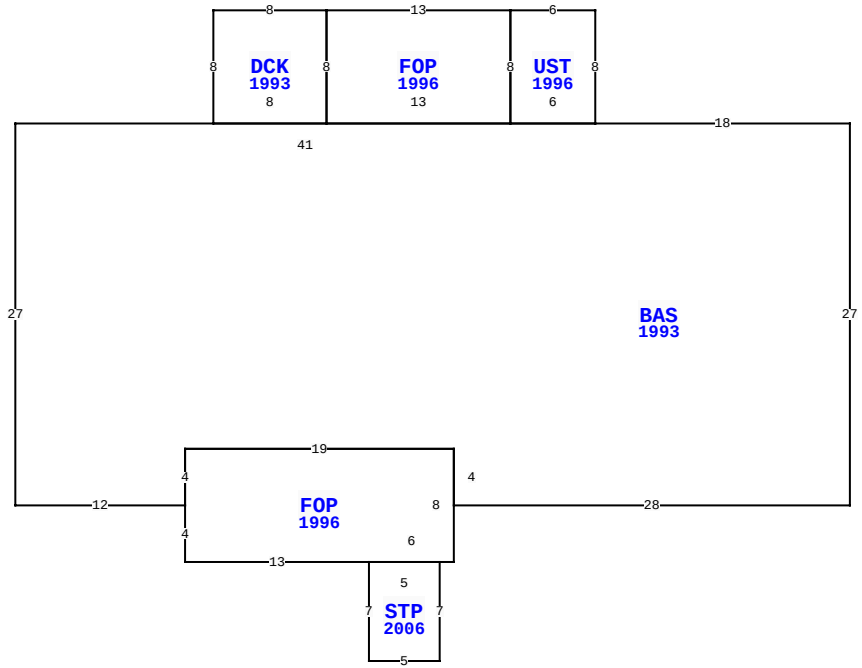

66092 WESTBERRY LN, CALLAHAN

BLD DATE	02/15/2007 JM	LGL DATE	
XF DATE		LAND DATE	
INC DATE		AG DATE	

NASSAU COUNTY PROPERTY — VALUATION SUMMARY

VALUATION BY	STANDARD
Tax Group: 4	Tax Dist:
BUILDING MARKET VALUE	243,219
TOTAL MARKET OB/XF VALUE	12,532
TOTAL LAND VALUE - MARKET	49,050
TOTAL MARKET VALUE	304,801
SOH/AGL Deduction	22,704
ASSESSED VALUE	282,097
TOTAL EXEMPTION VALUE	0
BASE TAXABLE VALUE	282,097
TOTAL JUST VALUE	304,801
NCON VALUE	0
INCOME VALUE	
PREVIOUS YEAR MKT VALUE	256,452

PERMIT NUM	DESCRIPTION	AMT	ISSUED

SALES DATA

OFF RECORD Number	DATE	TYPE INST	Q U	V I	RSN CD	SALE PRICE
2551/0269	3/30/2022	WD	Q	I	01	390,000
GRANTOR: LATHROP JASON						
GRANTEE: SMITH ELIJAH & BROO						
1423/1184	6/27/2006	WD	U	I	07	100
GRANTOR: SERGENT VERA S & CURT						
GRANTEE: LATHROP JASON						

BUILDING NOTES

BUILDING DIMENSIONS

BAS=[YR=1993] W18 UST=[YR=1996] N8 W6 FOP=[YR=1996] W13 DCK=[YR=1993] W8 S8 E8 N8$ S8 E13 N8$ S8 E6$ W41 S27 E12 FOP=[YR=1996] S4 E13 STP=[YR=2006] S7 E5 N7 W5$ E6 N8 W19 S4$ N4 E19 S4 E28 N27$.

EXTRA FEATURES

LN	OB/XF CODE	DESCRIPTION	BLD	CAP	L	W	UNITS	UT	Adj R	ADJ UNIT PRICE	ORIG COND	YEAR ON	YEAR ACTUAL	Q	% COND	OB/XF MKT VALUE	NOTES
1	0810	CONCRETE A	0	0	0	0	104.00	SF	6.50	6.50	100	1996	1996	3	72	487	
2	0510	GARAGE WD-	0	0	32	18	576.00	SF	35.00	35.00	100	2006	2006	3	44	8,870	
3	1242	WD DECK A	0	0	0	0	407.00	SF	10.00	10.00	100	2017	2017	3	78	3,175	

LAND DESCRIPTION

TOTAL OB/XF 12,532

LN	USE CODE	CLS	LAND USE DESCRIPTION	CAP	RD	LOC ZONE	FRONT	DEPTH	TOT LND UTS	UNIT TYPE	DT	DPTH FACT	% COND	TOT ADJ	UNIT PRICE	ADJ UNIT PRICE	LAND VALUE	OTHER ADJUSTMENTS AND NOTES	YEAR	DENSITY	DECL	FRZ	YR	CONSRV
1	000115	C	SFR ACRES	0	0007	OR	0.00	0.00	1.09	AC		1.00	1.00	1.00	45,000.00	45,000.00	49,050							

REVIEW DATE 12/21/2021 BY KBA Total Acres: 1.09 Total Land Value: 49,050 Market: 0 Agricultural: 0 Common: 49,050 PRINTED 08/06/2024 BY SYS