LOT 3
ESMT PT OR 1773/1210
SOUND POINT @ LONG POINT #2

ALVARADO LUIS A & ANDREA W
6 SOUND POINT PLACE
FERNANDINA BEACH, FL 32034

2024

03-6N-29-0SP2-0003-0000

NASSAU COUNTY PROPERTY

BUILDING CHARACTERISTICS

ELEMENT	CD	CONSTRUCTION
Exterior Wall	10	ABOVE AVG 90
Exterior Wall	17	CB STUCCO 10
Roof Structur	03	GABLE/HIP 100
Roof Cover	13	STAND SEAM 100
Interior Wall	05	DRYWALL 100
Interior Floo	12	HARDWOOD 70
Interior Floo	14	CARPET 30
Air Condition	03	CENTRAL 100
Heating Type	04	AIR DUCTED 100
Bedrooms		4 100
Bathrooms		4.5 100
Frame	02	WOOD FRAME 100
Stories	2.	2. 100
Units		0 100
Quality	05	Quality Level 05
DOR CODE	0100	SINGLE FAMILY
MAP NUM		MKT AREA 10
NEIGHBORHOOD/LOC	10007.00	

AREA TYPE	TOTAL GROSS AREA	PCT OF BASE	TOT ADJ AREA	SUBAREA MARKET VALUE
BAS	2,322	100	2,322	536,126
DCK	140	10	14	3,233
FGR	790	55	434	100,207
FOP	60	30	18	4,156
FOP	70	30	21	4,849
FOP	91	30	27	6,234
FOP	228	30	68	15,700
FSP	336	40	134	30,940
FST	77	55	42	9,697
FUS	2,019	100	2,019	466,166
TOTALS	6,133		5,099	1,177,308

MARKET ADJUSTMENTS

TYPE	MDL	EFF. AREA	TOT ADJ PTS	EFF. BASE RATE	REPL. COST NEW	AYB	EYB	ECON	FNCT		NORM	% COND
0500	11	5,099	155.5568	233.34	1,189,801	2020	2020	0	0	0	1.05	98.95

1 SFR CUST – 100% - 2023 Heated Area: 4341 HX Base Yr 2023

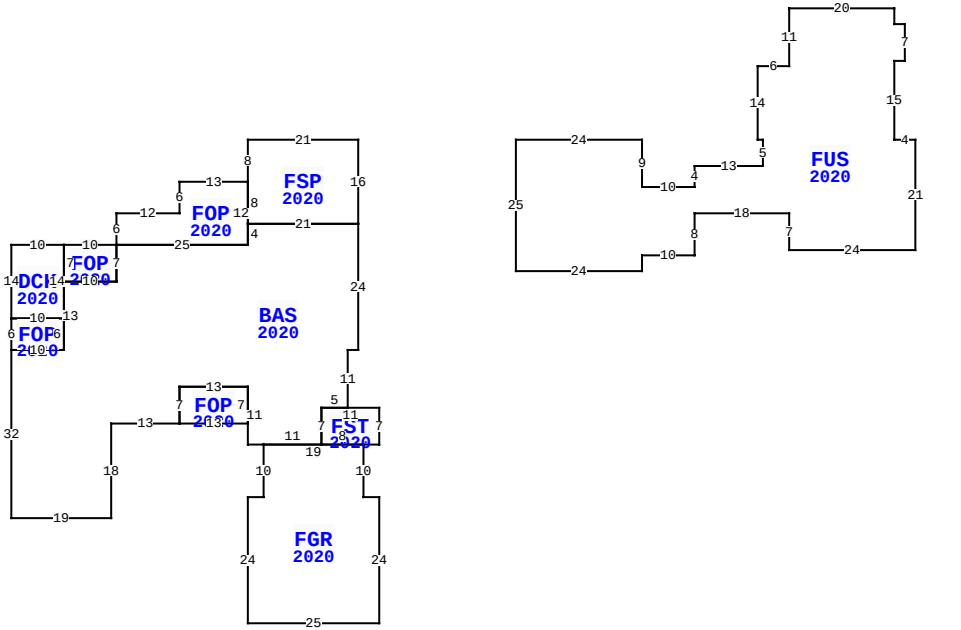

6 SOUND POINT PL, FERNANDINA BEACH

BLD DATE		LGL DATE	
XF DATE		LAND DATE	04/08/2024 MLU
INC DATE		AG DATE	

VALUATION SUMMARY

VALUATION BY		STANDARD
Tax Group: 5	Tax Dist:	
BUILDING MARKET VALUE		1,177,308
TOTAL MARKET OB/XF VALUE		87,593
TOTAL LAND VALUE - MARKET		1,610,000
TOTAL MARKET VALUE		2,874,901
SOH/AGL Deduction		204,210
ASSESSED VALUE		2,670,691
TOTAL EXEMPTION VALUE	HX HB	50,000
BASE TAXABLE VALUE		2,620,691
TOTAL JUST VALUE		2,874,901
NCON VALUE		0
INCOME VALUE		
PREVIOUS YEAR MKT VALUE		2,592,904

PERMIT NUM	DESCRIPTION	AMT	ISSUED
20008850	CO ISSUED	0	09/24/2020
19010021	SWIM POOL	0	12/27/2019
19009076	NEW CONSTR	601,591	08/22/2019

SALES DATA

OFF RECORD Number	DATE	TYPE INST	Q U	V I	RSN CD	SALE PRICE
2598/0622	10/24/2022	WD	U	I	11	100
GRANTOR: L & A REALTY TRUST						
GRANTEE: ALVARADO LUIS A & A						
2125/0067	6/06/2017	SW	U	V	12	550,000
GRANTOR: STATE BANK AND TRUST						
GRANTEE: L & A REALTY TRUST						

BUILDING NOTES

BUILDING DIMENSIONS

FSP=[YR=2020] W21 S8 FOP=[YR=2020] W13 S6 W12 S6
FOP=[YR=2020] W10 DCK=[YR=2020] W10 S14 FOP=[YR=2020] S6
BAS=[YR=2020] S32 E19 N18 E13 FOP=[YR=2020] E13 N7 W13 S7 $
N7 E13 S11 E3 FGR=[YR=2020] S10 W3 S24 E25 N24 W3 N10
FST=[YR=2020] E3 N7 W11 S7 E8 $ W19 $ E11 N7 E5 N11 E2 N24
W21 S4 W25 S7 W10 S13 W10 $ E10 N6 W10 $ E10 N14 $ S7 E10 N7
$ E25 N12 $ S8 E21 N16 $ PTR= E30 FUS=[YR=2020] E24 S9 E10
N4 E13 N5 W1 N14 E6 N11 E20 S3 E2 S7 W2 S15 E4 S21 W24 N7 W18
S8 W10 S3 W24 N25 $ W30 $.

EXTRA FEATURES

LN	OB/XF CODE	DESCRIPTION	BLD	CAP	L	W	UNITS	UT	Adj R	ADJ UNIT PRICE	ORIG COND	YEAR ON	YEAR ACTUAL	Q	% COND	OB/XF MKT VALUE	NOTES
1	0855	CONC PAVER	0	100	0	0	3,148.00	SF	10.00	10.00	100	2020	2020	3	99	31,165	
2	0861	POOL GUNIT	0	100	0	0	486.00	SF	85.00	85.00	100	2020	2020	3	93	38,418	
3	0300	BOAT DCK W	0	100	0	0	432.00	SF	40.00	40.00	100	2020	2020	3	93	16,070	
4	0871	POOL HTR R	1	100	0	0	1.00	UT	2,000.00	2,000.00	100	2023	2022		97	1,940	

LAND DESCRIPTION

TOTAL OB/XF 87,593

LN	USE CODE	CLS	LAND USE DESCRIPTION	CAP	RD	LOC ZONE	FRONT	DEPTH	TOT LND UTS	UNIT TYPE	DT	DPTH FACT	% COND	TOT ADJ	UNIT PRICE	ADJ UNIT PRICE	LAND VALUE	OTHER ADJUSTMENTS AND NOTES	YEAR	DENSITY	DECL	FRZ	YR	CONSRV
1	000132	C	SFR RIVER	100		PUD	0.00	0.00	1.00	LT		1.00	1.00	1.15	1,400,000.00	1,610,000.00	1,610,000							

REVIEW DATE 10/26/2020 BY RK Total Acres: 0.00 Total Land Value: 1,610,000 Market: 0 Agricultural: 0 Common: 1,610,000 PRINTED 08/06/2024 BY SYS