LOT 9 & DOCK ESMT RGTS
PT OR 1066/1545
(EX CNSVTN ESMT'S PT

KARLOVEC FAMILY LIVING TRUST/KARLOVEC RALPH C CO-T
165 LONG POINT DRIVE
FERNANDINA BEACH, FL 32034

2024

03-6N-29-00TP-0009-0000

BUILDING CHARACTERISTICS

ELEMENT	CD	CONSTRUCTION
Exterior Wall	16	WD FR STUC 70
Exterior Wall	17	CB STUCCO 30
Roof Structur	08	IRREGULAR 100
Roof Cover	08	CLAY TILE 100
Interior Wall	05	DRYWALL 100
Interior Floo	12	HARDWOOD 80
Interior Floo	14	CARPET 20
Air Condition	03	CENTRAL 100
Heating Type	04	AIR DUCTED 100
Bedrooms		5 100
Bathrooms		4.5 100
Frame	02	WOOD FRAME 100
Stories	3.	3. 100
Units		0 100
Quality	03	Quality Level 03
DOR CODE	0100	SINGLE FAMILY
MAP NUM		MKT AREA 10
NEIGHBORHOOD/LOC	10007.00	

AREA TYPE	TOTAL GROSS AREA	PCT OF BASE	TOT ADJ AREA	SUBAREA MARKET VALUE
BAS	1,576	100	1,576	403,329
FGR	484	55	266	68,074
FOP	44	30	13	3,327
FOP	77	30	23	5,886
FOP	105	30	32	8,190
FOP	168	30	50	12,796
FOP	400	30	120	30,710
FOP	406	30	122	31,222
FUS	1,707	100	1,707	436,855
FUS	1,958	100	1,958	501,090
TOTALS	7,443		5,970	1,527,840

MARKET ADJUSTMENTS

TYPE	MDL	EFF. AREA	TOT ADJ PTS	EFF. BASE RATE	REPL. COST NEW	AYB	EYB	ECON	FNCT		NORM	% COND
0500	12	5,970	191.7005	287.55	1,716,674	2001	2001	0	0	0	11.00	89.00

1 SFR CUST - 100% - 2004 Heated Area: 5241 HX Base Yr 2004

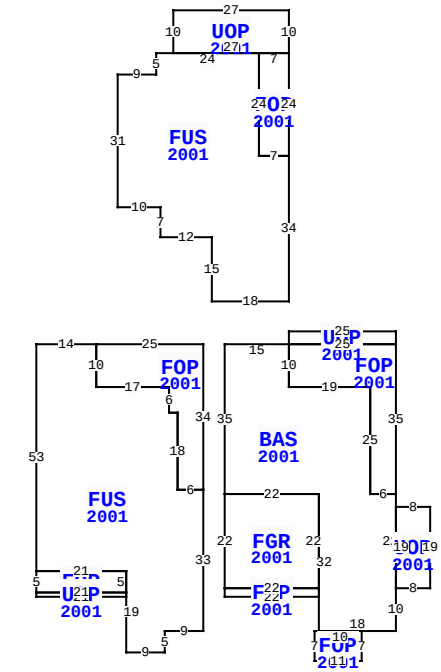

** This building has 14 Sub-Areas

165 LONG POINT DR, FERNANDINA BEACH

BLD DATE		LGL DATE	
XF DATE		LAND DATE	04/08/2024 MLU
INC DATE		AG DATE	

NASSAU COUNTY PROPERTY

PAGE 1 of 1 5

VALUATION SUMMARY

VALUATION BY		STANDARD
Tax Group: 5	Tax Dist:	
BUILDING MARKET VALUE		1,527,840
TOTAL MARKET OB/XF VALUE		38,383
TOTAL LAND VALUE - MARKET		700,000
TOTAL MARKET VALUE		2,266,223
SOH/AGL Deduction		1,174,586
ASSESSED VALUE		1,091,637
TOTAL EXEMPTION VALUE	HX HB	50,000
BASE TAXABLE VALUE		1,041,637
TOTAL JUST VALUE		2,266,223
NCON VALUE		0
INCOME VALUE		
PREVIOUS YEAR MKT VALUE		2,098,414

PERMIT NUM	DESCRIPTION	AMT	ISSUED
M014869	H/AC	0	02/01/2001
B007248	NEW CONSTR	350,000	06/01/2000

SALES DATA

OFF RECORD Number	DATE	TYPE INST	Q U	V I	RSN CD	SALE PRICE
2685/443	12/13/2023	WD	U	I	11	100
GRANTOR: KARLOVEC RALPH C & PA						
GRANTEE: KARLOVEC FAMILY LIV						
1053/1986	5/03/2002	WD	Q	I		1,100,000
GRANTOR: AMELIA ISLAND DEVELOP						
GRANTEE: KARLOVEC RALPH & PA						

BUILDING NOTES

BUILDING DIMENSIONS

BAS=[YR=2001] W15 S35 FGR=[YR=2001] S22 FOP=[YR=2001] S2 E22 N2 W22 $ E22 N22 W22 $ E22 S32 FOP=[YR=2001] W1 S7 E11 N7 W10 $ E18 N10 UOP=[YR=2001] E8 N19 W8 S19 $ N22 FOP=[YR=2001] N35 UOP=[YR=2001] N3 W25 S3 E25 $ W25 S10 E19 S25 E6 $ W6 N25 W19 N10 $ PTR= W20 FOP=[YR=2001] W25 FUS=[YR=2001] W14 S53 FOP=[YR=2001] S5 UOP=[YR=2001] S1 E21 N1 W21 $ E21 N5 W21 $ E21 S19 E9 N5 E9 N33 W6 N18 W2 N6 W17 N10 $ S10 E17 S6 E2 S18 E6 N34 $ E20 $ PTR= N10 FUS=[YR=2001] N34 FOP=[YR=2001] N24 UOP=[YR=2001] N10 W27 S10 E27 $ W7 S24 E7 $ W7 N24 W24 S5 W9 S31 E10 S7 E12 S15 E18 $ S10 $.

EXTRA FEATURES

LN	OB/XF CODE	DESCRIPTION	BLD	CAP	L	W	UNITS	UT	Adj R	ADJ UNIT PRICE	ORIG COND	YEAR ON	YEAR ACTUAL	Q	% COND	OB/XF MKT VALUE	NOTES
1	0855	CONC PAVER	0	100	0	0	1,480.00	SF	10.00	10.00	100	2001	2001	3	80	11,840	
2	0855	CONC PAVER	0	100	14	4	56.00	SF	10.00	10.00	100	2001	2001	3	80	448	
3	0504	FP-ELECTRI	0	100	0	0	1.00	UT	2,000.00	2,000.00	100	2001	2001	3	85	1,700	
4	0858	SCULP CONC	0	100	26	26	676.00	SF	13.00	13.00	100	2001	2001	3	94	8,261	
5	0810	CONCRETE A	0	100	109	2	218.00	SF	6.50	6.50	100	2001	2001	3	80	1,134	
6	0410	ELEVATOR	0	100	0	0	1.00	UT	15,000.00	15,000.00	100	2001	2001	3	100	15,000	

LAND DESCRIPTION

TOTAL OB/XF 38,383

LN	USE CODE	CLS	LAND USE DESCRIPTION	CAP	RD	LOC ZONE	FRONT	DEPTH	TOT LND UTS	UNIT TYPE	DT	DPTH FACT	% COND	TOT ADJ	UNIT PRICE	ADJ UNIT PRICE	LAND VALUE	OTHER ADJUSTMENTS AND NOTES	YEAR	DENSITY	DECL	FRZ	YR	CONSRV
1	000130	C	SFR WATER	100		PUD	0.00	0.00	1.00	LT		1.00	1.00	1.00	700,000.00	700,000.00	700,000							

REVIEW DATE 05/12/2019 BY KBA Total Acres: 0.00 Total Land Value: 700,000 Market: 0 Agricultural: 0 Common: 700,000 PRINTED 08/06/2024 BY SYS