LOT 27
SOUND POINT @ LP PB5/190

FOX PAMELA A LIVING TRUST/FOX PAMELA A TRUSTEE
119 LONG POINT DR
FERNANDINA BEACH, FL 32034

2024

03-6N-29-00SP-0027-0000

NASSAU COUNTY PROPERTY

BUILDING CHARACTERISTICS

ELEMENT	CD	CONSTRUCTION
Exterior Wall	10	ABOVE AVG 50
Exterior Wall	17	CB STUCCO 50
Roof Structur	08	IRREGULAR 100
Roof Cover	07	CONC TILE 100
Interior Wall	05	DRYWALL 100
Interior Floo	12	HARDWOOD 70
Interior Floo	11	CLAY TILE 30
Air Condition	03	CENTRAL 100
Heating Type	04	AIR DUCTED 100
Bedrooms		4 100
Bathrooms		3 100
Frame	03	MASONRY 100
Stories	2.5	2.5 100
Units		0 100
Quality	04	Quality Level 04
DOR CODE	0100	SINGLE FAMILY
MAP NUM		MKT AREA 10
NEIGHBORHOOD/LOC	10007.00	

AREA TYPE	TOTAL GROSS AREA	PCT OF BASE	TOT ADJ AREA	SUBAREA MARKET VALUE
BAS	1,628	100	1,628	439,686
FCP	208	25	52	14,044
FGR	528	55	290	78,323
FOP	96	30	29	7,832
FOP	180	30	54	14,584
FOP	188	30	56	15,124
FST	204	55	112	30,249
FUS	153	100	153	41,322
FUS	1,842	100	1,842	497,483
STR	44	10	4	1,081
TOTALS	7,235		4,619	1,247,489

MARKET ADJUSTMENTS

TYPE	MDL	EFF. AREA	TOT ADJ PTS	EFF. BASE RATE	REPL. COST NEW	AYB	EYB	ECON	FNCT		NORM	% COND
0500	12	4,619	186.1023	279.15	1,289,394	2016	2016	0	0	0	3.25	96.75

1 SFR CUST – 100% - 2017 Heated Area: 3623 HX Base Yr 2017

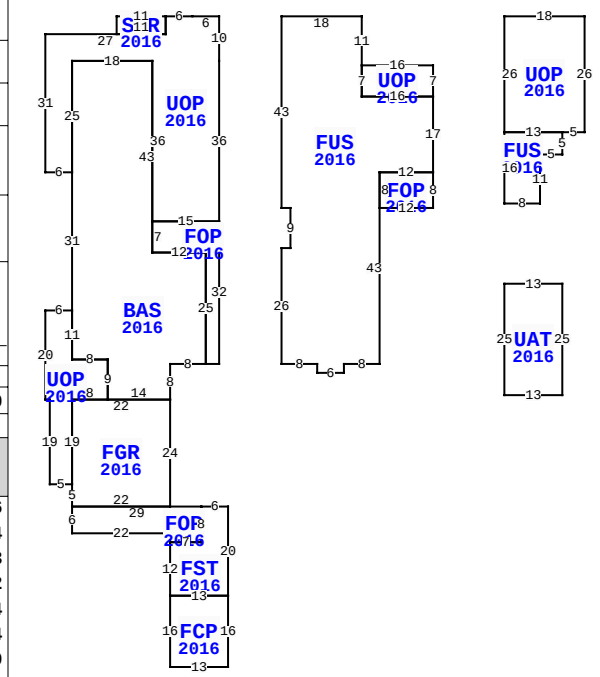

** This building has 15 Sub-Areas

119 LONG POINT DR, FERNANDINA BEACH

BLD DATE		LGL DATE	
XF DATE		LAND DATE	04/08/2024 MLU
INC DATE		AG DATE	

VALUATION SUMMARY

VALUATION BY		STANDARD
Tax Group: 5	Tax Dist:	
BUILDING MARKET VALUE		1,247,489
TOTAL MARKET OB/XF VALUE		174,285
TOTAL LAND VALUE - MARKET		700,000
TOTAL MARKET VALUE		2,121,774
SOH/AGL Deduction		635,652
ASSESSED VALUE		1,486,122
TOTAL EXEMPTION VALUE	HX HB	50,000
BASE TAXABLE VALUE		1,436,122
TOTAL JUST VALUE		2,121,774
NCON VALUE		0
INCOME VALUE		
PREVIOUS YEAR MKT VALUE		1,971,770

PERMIT NUM	DESCRIPTION	AMT	ISSUED
B1530306	CO ISSUED	0	05/05/2016
B1631931	SCRNENCL	17,449	03/01/2016
B1530306	NEW CONSTR	479,633	04/01/2015

SALES DATA

OFF RECORD Number	DATE	TYPE INST	Q U	V I	RSN CD	SALE PRICE
2376/1508	7/15/2020	SW	U	I	11	100
GRANTOR: FOX PAMELA ANN						
GRANTEE: FOX PAMELA A LIVING						
2171/1435	1/03/2018	FJ	U	I	11	0
GRANTOR: CLERK OF COURT						
GRANTEE: FOX PAMELA ANN						

BUILDING NOTES

BUILDING DIMENSIONS

UOP=[YR=2016] W6 STR=[YR=2016] W11 S4 E11 N4$S4 W27 S31 E6 BAS=[YR=2016] S31 UOP=[YR=2016] W6S20E1 S19 E5 FGR=[YR=2016] S5 FOP=[YR=2016] S6 E22 S2 FST=[YR=2016] S12 FCP=[YR=2016] S16 E13 N16W13$ E13N20W6S8W7$ E7N8W29$ E22 N24 W22 S19$ N19 E8 N9 W8 N11$ S11 E8S9E14N8 E8FOP=[YR=2016] E3N32W15S7E12S25$ N25W12N43W18 S25$ N25E18S36E15N36 N10W6$ PTR=E20 FUS=[YR=2016] E18 S11 UOP=[YR=2016] E16 S7 W16 N7$ S7 E16 S17 FOP=[YR=2016] S8 W12 N8 E12$ W12 S43 W8 S2 W6 N2 W8 N26 E2 N9 W2 N43$ W20$ PTR=E70 UOP=[YR=2016] E18 S26 W5 FUS=[YR=2016] S5 W5 S11 W8 N16 E13$ W13 N26$ W70$ PTR= E70 S60 UAT=[YR=2016] E13 S25 W13 N25$ N60 W70$.

EXTRA FEATURES

LN	OB/XF CODE	DESCRIPTION	BLD	CAP	L	W	UNITS	UT	Adj R	ADJ UNIT PRICE	ORIG COND	YEAR ON	YEAR ACTUAL	Q	% COND	OB/XF MKT VALUE	NOTES
1	0504	FP-ELECTRI	0	100	0	0	1.00	UT	2,000.00	2,000.00	100	2016	2016	3	97	1,940	
2	0855	CONC PAVER	0	100	0	0	2,128.00	SF	10.00	10.00	100	2016	2016	3	96	20,429	
3	0861	POOL GUNIT	0	100	0	0	264.00	SF	170.00	170.00	100	2016	2016	3	81	36,353	
4	1075	TRELLIS G	0	100	31	7	217.00	SF	35.00	35.00	100	2016	2016	3	81	6,152	
5	0600	SUMMER KIT	0	100	0	0	1.00	UT	10,000.00	10,000.00	100	2016	2016	3	74	7,400	
6	0912	SCRN RM G	0	100	15	43	645.00	SF	20.00	20.00	100	2016	2016	3	74	9,546	
7	0855	CONC PAVER	0	100	0	0	257.00	SF	10.00	10.00	100	2016	2016	3	96	2,467	
8	1242	WD DECK A	0	100	0	0	1,032.00	SF	10.00	10.00	100	2016	2016	3	74	7,637	
9	0300	BOAT DCK W	0	100	0	0	2,542.00	SF	40.00	40.00	100	2016	2016	3	81	82,361	

LAND DESCRIPTION

TOTAL OB/XF 174,285

LN	USE CODE	CLS	LAND USE DESCRIPTION	CAP	RD	LOC ZONE	FRONT	DEPTH	TOT LND UTS	UNIT TYPE	DT	DPTH FACT	% COND	TOT ADJ	UNIT PRICE	ADJ UNIT PRICE	LAND VALUE	OTHER ADJUSTMENTS AND NOTES	YEAR	DENSITY	DECL	FRZ	YR	CONSRV
1	000132	C	SFR RIVER	100		PUD	0.00	0.00	1.00	LT		1.00	1.00	1.00	700,000.00	700,000.00	700,000							

REVIEW DATE 01/14/2021 BY KBA Total Acres: 0.00 Total Land Value: 700,000 Market: 0 Agricultural: 0 Common: 700,000 PRINTED 08/06/2024 BY SYS