LOTS 25 & 26
SOUND POINT @ LP PB5/190

ELFMAN MERRICK
123 LONG POINT DR
FERNANDINA BEACH, FL 32034

2024

03-6N-29-00SP-0025-0000

BUILDING CHARACTERISTICS

ELEMENT	CD	CONSTRUCTION
Exterior Wall	16	WD FR STUC 100
Roof Structur	08	IRREGULAR 100
Roof Cover	08	CLAY TILE 100
Interior Wall	05	DRYWALL 100
Interior Floo	12	HARDWOOD 90
Interior Floo	11	CLAY TILE 10
Air Condition	03	CENTRAL 100
Heating Type	04	AIR DUCTED 100
Bedrooms		3 100
Bathrooms		4 100
Frame	02	WOOD FRAME 100
Stories	2.	2. 100
Units		0 100
Occupancy	00	NONE 100
Quality	05	Quality Level 05
DOR CODE	0100	SINGLE FAMILY
MAP NUM		MKT AREA 10
NEIGHBORHOOD/LOC	10007.00	

AREA TYPE	TOTAL GROSS AREA	PCT OF BASE	TOT ADJ AREA	SUBAREA MARKET VALUE
BAS	1,128	100	1,128	345,934
FBM	311	80	249	76,363
FGR	840	55	462	141,686
FOP	12	30	4	1,227
FOP	117	30	35	10,734
FOP	176	30	53	16,254
FOP	414	30	124	38,028
FSP	319	40	128	39,255
FSP	606	40	242	74,216
FSP	166	40	66	20,241
TOTALS	6,641		4,704	1,442,618

MARKET ADJUSTMENTS

TYPE	MDL	EFF. AREA	TOT ADJ PTS	EFF. BASE RATE	REPL. COST NEW	AYB	EYB	ECON	FNCT		NORM	% COND
0500	12	4,704	205.4832	308.22	1,449,867	1992	2022	0	0	0	0.50	99.50

1 SFR CUST – 100% - 2023 Heated Area: 3475 HX Base Yr 2023

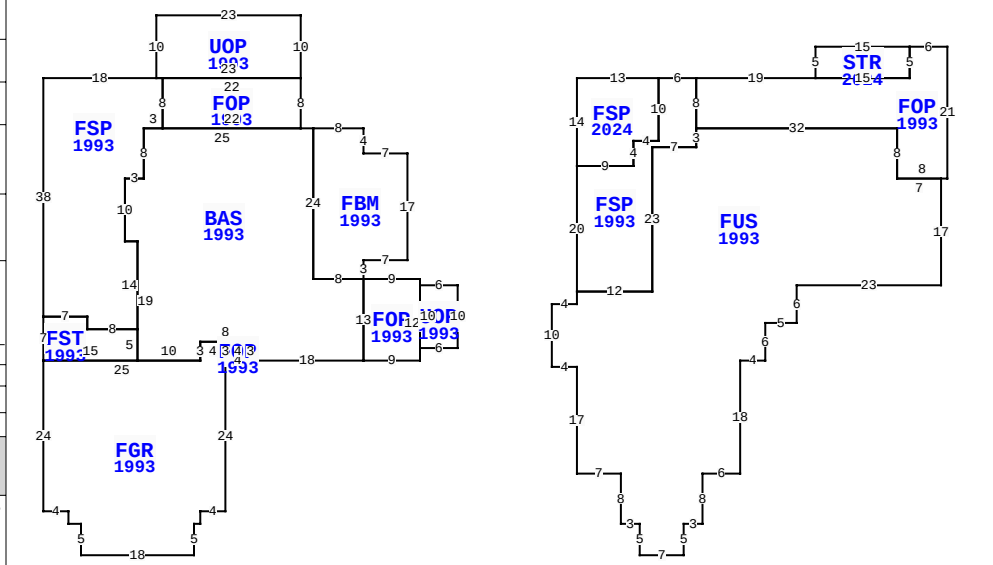

** This building has 15 Sub-Areas

123 LONG POINT DR, FERNANDINA BEACH

BLD DATE		LGL DATE	
XF DATE		LAND DATE	04/08/2024 MLU
INC DATE		AG DATE	

NASSAU COUNTY PROPERTY

PAGE 1 of 1 5

VALUATION SUMMARY

VALUATION BY		STANDARD
Tax Group: 5	Tax Dist:	
BUILDING MARKET VALUE		1,442,618
TOTAL MARKET OB/XF VALUE		34,010
TOTAL LAND VALUE - MARKET		1,190,000
TOTAL MARKET VALUE		2,666,628
SOH/AGL Deduction		453,447
ASSESSED VALUE		2,213,181
TOTAL EXEMPTION VALUE	HX HB	50,000
BASE TAXABLE VALUE		2,163,181
TOTAL JUST VALUE		2,666,628
NCON VALUE		459,640
INCOME VALUE		
PREVIOUS YEAR MKT VALUE		1,702,502

PERMIT NUM	DESCRIPTION	AMT	ISSUED
22015276	REMODEL	40,000	10/12/2022
22011670	REMODEL	400,000	08/01/2022
B1804608	SWIM POOL	50,000	05/07/2018
B22589	REMODEL	6,000	06/01/2009
7137	NEW CONSTR	406,000	04/03/1991

SALES DATA

OFF RECORD Number	DATE	TYPE INST	Q U	V I	RSN CD	SALE PRICE
2561/1004	5/09/2022	WD	Q	I	05	2,775,000
GRANTOR: NEWBURGER CAROL P						
GRANTEE: ELFMAN MERRICK						
2105/0569	3/07/2017	WD	Q	I	02	1,300,000
GRANTOR: LEYDEN JAMES J & CLAU						
GRANTEE: NEWBURGER CAROL P						

BUILDING NOTES

BUILDING DIMENSIONS

FUS=[YR=1993;ORIG=15,3] E4 N2 E12 N23 E7 N3 E32 S8 E7 S17 W23 S6 W5 S6 W4 S18 W6 S8 W3 S5 W7 N5 W3 N8 W7 N17 W4 N10 $
BAS=[YR=1993;ORIG=-23,-25] W2 W25 S8 W3 S10 E2 S19 E10 N3 E8 S3 E18 N13 W8 N24 $
FGR=[YR=1993;ORIG=-66,12] S24 E4 S2 E2 S5 E18 N5 E1 N2 E4 N24 N3 W4 S3 W25 $
FSP=[YR=1993;ORIG=-48,-33] W18 S38 E7 S2 E8 N14 W2 N10 E3 N8 E3 N8 W1 $
FOP=[YR=1993;ORIG=38,-25] E32 S8 E8 N21 W6 S5 W15 W19 S8 $
FSP=[YR=1993;ORIG=19,1] E12 N23 E7 N3 N8 W6 S10 W4 S4 W9 S20 $
FBM=[YR=1993;ORIG=-15,-1] N3 E7 N17 W7 N4 W8 S24 E8 $

EXTRA FEATURES

LN	OB/XF CODE	DESCRIPTION	BLD	CAP	L	W	UNITS	UT	Adj R	ADJ UNIT PRICE	ORIG COND	YEAR ON	YEAR ACTUAL	Q	% COND	OB/XF MKT VALUE	NOTES
1	0504	FP-ELECTRI	0	100	0	0	1.00	UT	2,000.00	2,000.00	100	1992	1992	3	72	1,440	
2	0877	JACUZZI	0	100	0	0	1.00	UT	1,000.00	1,000.00	100	1992	1992	3	20	200	
3	0820	WOOD WALK	0	100	0	0	366.00	SF	11.75	11.75	100	1992	1992	3	40	1,720	
4	0300	BOAT DCK W	0	100	0	0	828.00	SF	40.00	40.00	100	1992	1992	3	20	6,624	
5	0855	CONC PAVER	0	100	0	0	1,854.00	SF	7.00	7.00	100	2018	2018	3	97	12,589	
6	0855	CONC PAVER	0	100	0	0	1,600.00	SF	7.00	7.00	100	2018	2018	3	97	10,864	
8	1126	CB/STC 8"	0	100	0	0	112.00	SF	8.00	8.00	100	1992	1992	3	64	573	

LAND DESCRIPTION

TOTAL OB/XF 34,010

LN	USE CODE	CLS	LAND USE DESCRIPTION	CAP	RD	LOC ZONE	FRONT	DEPTH	TOT LND UTS	UNIT TYPE	DT	DPTH FACT	% COND	TOT ADJ	UNIT PRICE	ADJ UNIT PRICE	LAND VALUE	OTHER ADJUSTMENTS AND NOTES	YEAR	DENSITY	DECL	FRZ	YR	CONSRV
1	000132	C	SFR RIVER	100		PUD	0.00	0.00	2.00	LT		1.00	1.00	0.70	850,000.00	595,000.00	1,190,000							

REVIEW DATE 02/28/2024 BY TW Total Acres: 0.00 Total Land Value: 1,190,000 Market: 0 Agricultural: 0 Common: 1,190,000 PRINTED 08/06/2024 BY SYS